ORDER NO. VRD-8202-048

# Service Manual

Color Video Camera

# PK-802

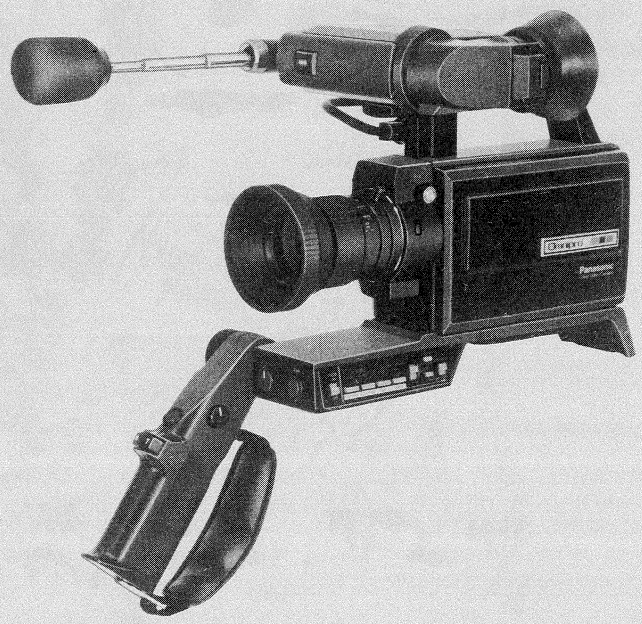

| Vol. 1 | Vol. 2 | Vol. 3 | Vol. 4 | Vol. 5 |
|---|---|---|---|---|
| *Summary Technical Descriptions* | *Troubleshooting Guide Adjustment Procedures* | *Block Diagrams* | *Schematic Diagrams* | *Exploded Views Replacement Parts List* |

**Panasonic®**


Panasonic Company
Division of Matsushita Electric
Corporation of America
One Panasonic Way, Secaucus,
New Jersey 07094

Panasonic Hawaii Inc.
91-238 Kauhi St., Ewa Beach
P.O. Box 774
Honolulu, Hawaii 96808-0774

Panasonic Canada
Division of Matsushita Electric
of Canada Limited
5770 Ambler Drive, Mississauga,
Ontario, L4W 2T3

Panasonic Sales Company,
Division of Matsushita Electric
of Puerto Rico, Inc.
Ave, 65 De Infanteria, KM 9.7
Victoria Industrial Park
Carolina, Puerto Rico 00630

ORDER NO. VRD-8202-048

# Service Manual

Color Video Camera

**Vol. 1**

# PK-802

***Summary Technical Descriptions***

## SPECIFICATIONS:

| | |
|---|---|
| Power Source: | DC 12V ± 10%<br>AC 120V ± 10%, 60Hz ± 0.5%<br>(with Power Supply Unit) |
| **Power Consumption: (with E.V.F)** | DC 5.8W at 12V DC (Battery)<br>DC 1.2W at standby |
| **Special Tube System:** | 2/3″ frequency separation single tube system (built-in stripe filter) |
| Single Carrier Frequency: | 4.3MHz |
| Focus System: | Electro-static type |
| Lens Mounting: | Built-in zoom lens (not "C" mount) |
| Lens: | 6:1 zoom lens with auto/manual iris control.<br>Auto zoom lens and macro construction<br>F: 1.4, f: 12mm—72mm<br>d: 1.0m to infinity |
| Lens Diameter: | 49mm |
| Light Sensitivity: | Minimum light intensity on optical image: 40 Lux (F: 1.4)<br>Optimum light intensity on optical image: 900 Lux |
| Video Output Level: | 1.0Vp-p, 75Ω (M type coaxial connector)<br>(Standard NTSC signal) |
| Sync. System: | Internal Sync: RS-170 |
| Signal to Noise Ratio: | More than 45dB |
| Horizontal Resolution: | More than 270 lines |
| Color Temperature Control: | 2 step switch (indoor/outdoor) & auto adjust |
| Microphone: | Condenser Microphone |
| Audio Output Level: | −20dB, Hi-impedance |
| Audio Output Impedance: | High impedance (1KΩ) |
| External Microphone Input Impedance: | 600Ω unbalanced |
| Electronic Viewfinder: | Monochrome 1 inch CRT |
| Operating Temperature: | 5°C to 35°C |
| Operating Humidity: | 10% to 75% |
| Operating Position: | Normal position only |
| Weight: | Camera Head with E.V.F.<br>5.1 lbs (with lens, 7ft. cable & shoulder pad/handle grip)<br>AC adaptor (option)<br>2.4 lbs |
| Dimensions: | Camera Head with E.V.F.<br>8.3″(W) × 8.7″(H) × 11.2″(D)<br>208mm(W) × 218mm(H) × 282mm(D)<br>AC adaptor (option)<br>3″(W) × 3″(H) × 6″(D)<br>80mm(W) × 75mm(H) × 149mm(D) |

Weight and dimensions shown are approximate.
Specifications are subject to change without notice.

**Panasonic**


Panasonic Company
Division of Matsushita Electric
Corporation of America
One Panasonic Way, Secaucus,
New Jersey 07094

Panasonic Hawaii Inc.
91-238 Kauhi St. Ewa Beach
P.O. Box 774
Honolulu, Hawaii 96808-0774

Panasonic Canada
Division of Matsushita Electric
of Canada Limited
5770 Ambler Drive, Mississauga,
Ontario, L4W 2T3

Panasonic Sales Company,
Division of Matsushita Electric
of Puerto Rico, Inc.
Ave, 65 De Infanteria, KM 9.7
Victoria Industrial Park
Carolina, Puerto Rico 00630

# CONTENTS

FEATURES ..... 1-1
ACCESSORIES ..... 1-1
PRECAUTIONS ..... 1-2
OPERATING COMPONENTS AND THEIR FUNCTIONS ..... 1-3
CONNECTION DIAGRAM ..... 1-7
MOUNTING THE CAMERA ON THE TRIPOD ..... 1-8
OPERATING PROCEDURE ..... 1-9
DESCRIPTION OF FADE FUNCTION ..... 1-10
USING THE REMOTE CONTROL FUNCTIONS ..... 1-11
DISPLAYS ON THE ELECTRONIC VIEWFINDER CRT ..... 1-12
BEFORE SERVICING ..... 1-15
GENERAL DESCRIPTION ..... 1-17
(1) Special Tube ..... 1-17
(2) Gamma ..... 1-21
(3) Stripe Filter ..... 1-22
(4) Correction Circuits ..... 1-28

# FEATURES

**Electronic viewfinder**
The electronic viewfinder allows you to see exactly what the camera lens sees. Inside the viewfinder there is one LED indicating insufficient light intensity, one LED for indicating VCR remote control status and one LED for white balance control status.

**Camera Remote Control**
VCR functions (PLAY/PAUSE,CUE,REVIEW, SLOW/F.ADV,INSERT) can be controlled from the camera which incorporates the microcomputer system.

**Electronic Viewfinder Display**
Title, stopwatch, battery, tape counter and fade-in/fade-out can be displayed on the Viewfinder. Also, title and stopwatch can be recorded.

**Zoom lens with Power zoom and MACRO function.**
6:1 zoom lens with Power zoom allows you to "zoom-in" for a closer picture. This is simply done by pressing the Power zoom switch. Also, close-up pictures can be obtained by using MACRO function.

**Automatic iris control**
Automatic iris control adjusts the amount of light entering the camera to provide the proper picture contrast.

**Automatic white balance control**
Optimum color pictures can be achieved under varying lighting conditions.

**Boom microphone**
Sound as well as pictures can be recorded at the same time because the camera contains a built-in microphone that can also be extended to pick up sounds more distinctly.

**Standby switch**
The standby switch is for saving battery power when the recording is in the pause mode for a long period.

**Negative-positive reverse switch**
Negative color films can be viewed in normal color conditions by using the optional Adaptor.

**Fader switch**
The picture automatically fades in or fades out every time you push the VCR remote control switch.

# ACCESSORIES

**Accessories included:**

Standard accessories (supplied)
Camera Unit (PK–802) ..1pc.
Electronic Viewfinder (PK–M054) ..1pc.

**Optional accessories**

10-pin extension camera cable (20H-20F)
AC Adaptor (PK-A789) with 3 cables
Film transfer Adaptor (PK-F35)

# PRECAUTIONS

x Do not attempt to disassemble the camera or power supply. In order to prevent electric shock, do not remove screws or covers.
There are no user-serviceable parts inside.

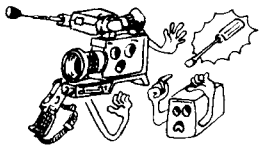

x Do not abuse the camera. Avoid striking, shaking etc. The camera contains a sensitive pick-up tube which could be damaged by improper handling or storage.

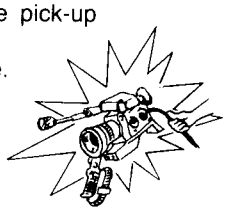

x Do not let the lens remain uncapped when the camera is not in use.

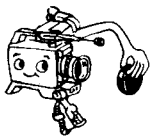

x Do not touch the surface of the lens with your hand.

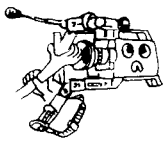

x Do not use strong or abrasive detergents when cleaning the camera body.

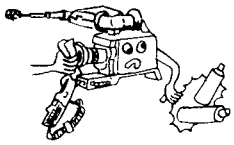

x Do not aim the camera toward the sun or other extremely bright objects,whether it is turned on or not. This action could permanently damage the pick-up tube.

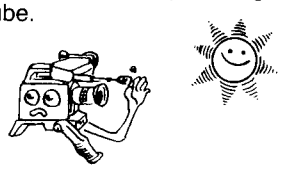

x Do not expose the camera or power supply to rain or moisture, or try to operate it in wet areas. Do not operate the camera or power supply if it becomes wet.

x Do not use the camera in an extreme environment where high temperature or high humidity exist.

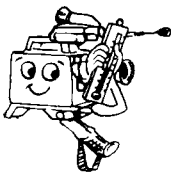

x Do not try to operate the camera and power supply on power line voltages other than 120V AC at 60Hz.

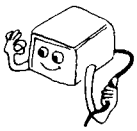

x Do not leave the camera and power supply turned on when not in use.
Do not turn the power on and off repeatedly without use.
Do not block the ventilation slots.

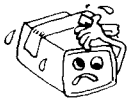

x Do not store the camera under conditions where temperatures are over 122°F (50°C)

# OPERATING COMPONENTS AND THEIR FUNCTIONS

## A. Camera Head

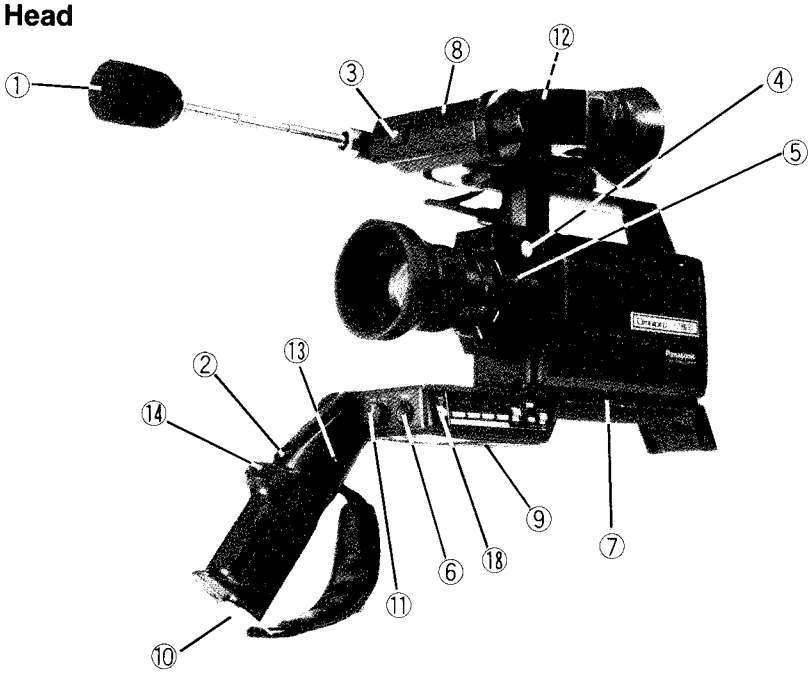


① **Boom Microphone**
To record audio while the picture is recorded. Extend out the boom microphone to pick up sounds more distinctly when recording.

② **VCR Pause Switch (pause trigger)**
The trigger operated switch is used to place the VCR in the pause mode while focusing or adjusting the camera or simply changing the scene to be recorded.

③ **Tally Light (VCR remote control status LED)**
The tally light (red) flashes while recording so that person before the camera can recognize that recording is actually in progress.

④ **Auto/Manual Iris Control Switch**
This switch selects the lens iris control for MANUAL or AUTO operation.
(1) When this switch is pushed in the auto-iris automati-cally adjusts the lens opening or aperture to admit the proper amount of light for the camera.
(2) When this switch is pulled out the lens iris can be manually adjusted.

⑤ **Color Temperature Correction Switch (Filter selection)**
Optimum color pictures can be achieved for varying light conditions.
This switch selects the approximate corrections for indoor or outdoor usage.
Set to " ☼ " for outdoor use and set to " ☃ " for indoor use.

⑥ **Automatic White Balance Control (A.W.C.) Switch**
The camera has an Automatic White Balance Control circuit. White balance ia automatically set by pushing the A.W.C. switch, after making the proper selection with the color temperature correction switch. Also the A.W.C. indicator on the EVF glows green when the white balance is set.
It is recommended that the A.W.C. switch is re-pushed to adjust the white balance whenever the scene is changed.

⑦ **VHS Compatibility Switch**
Permits use of this camera with most other VHS portable recorders and is preset to the "⊕RUN" position. If when using other VHS portable recorders, the START/STOP switch on the camera operates in the reverse manner, place the camera in the standby position and place the compatibility switch in the "RUN⊖" position. Slide the shoulder pad backward to gain access to this switch.

⑧ **Electronic Viewfinder**
This is a TV monitor which shows the actual picture in black and white that the lens sees.
This Electronic Viewfinder is attachable to either side of the camera head considering right or left hand operation.

a) Light intensity indicator
This indicator consists of one LED that, when illuminated, indicates insufficient light for producing a quality picture. The camera has an Automatic Iris Control Circuit. It makes sure that the iris is opened for proper exposure and under sufficient light conditions,turning off the orange light. Therefore, when the orange light is on, the light intensity is insufficient. Provide more illumination.

b) A.W.C. Indicator (Automatic White Balance Control)
This indicator is a two-color LED which is used with the Automatic White Balance Control. The LED glows RED when the camera is turned on. This means that the white balance hasn't been set yet. Before you are ready to shoot – press the A.W.C. button. While the white balance is automatically being adjusted – the LED flashes RED – GREEN – RED – GREEN, etc. The LED will glow GREEN when the white balance is set. Set A.W.C. again if the lighting is changed.

c) VCR pause indicator
This green indicator is on when the recording is in progress.

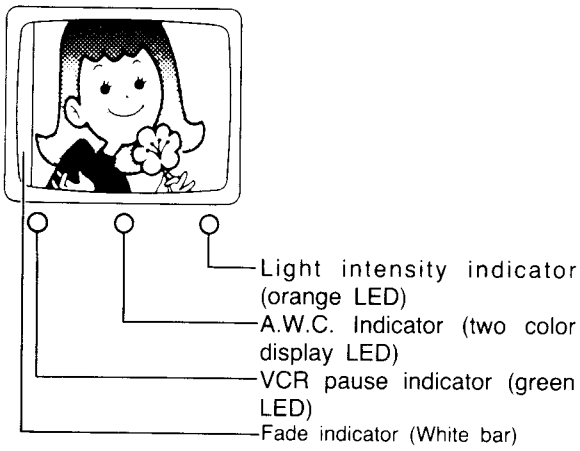


d) Fade-in/out indicator
White bar appears on the left side of the EVF when setting the Fader switch to the "ON" position.

⑨ **Tripod Mounting Hole**
This hole is used for mounting the camera on a tripod with standard 1/4-20 thread.

⑩ **Holder Pod Mounting Hole**
This hole is used for a holder pod.
This hole should not be used to mount the camera on a tripod.

⑪ **Color Control Knob**
The red and blue color are balanced and preset at the center (detent) position which usually will provide accurate color reproduction. When used indoors, the color balance control can be adjusted while viewing a color TV.

⑫ **Picture turning switch**
This switch is used to invert the picture on the EVF and should be switched only with power off.

(1) Set to the "R" position for right hand operation.

(2) When the EVF is mounted for left hand operation, the viewfinder picture is upside down. Accordingly set to the "L" position so that the picture on the EVF can be seen in its normal condition. This switch does not affect the picture which is recorded.

⑬ **Power Zoom Speed Control**
This camera has a power zoom lens with variable speed. Adjust the speed to your preference.

⑭ **Power Zoom Switch**
This switch works in conjunction with the zoom lens, and allows you to "Zoom-in" (Telephoto or T position) or "Zoom-out" (Wide Angle or W position) by pressing it.

⑮ **Camera Cable**
This 7 foot long cable is used to provide the interconnections between the camera and portable VCR.

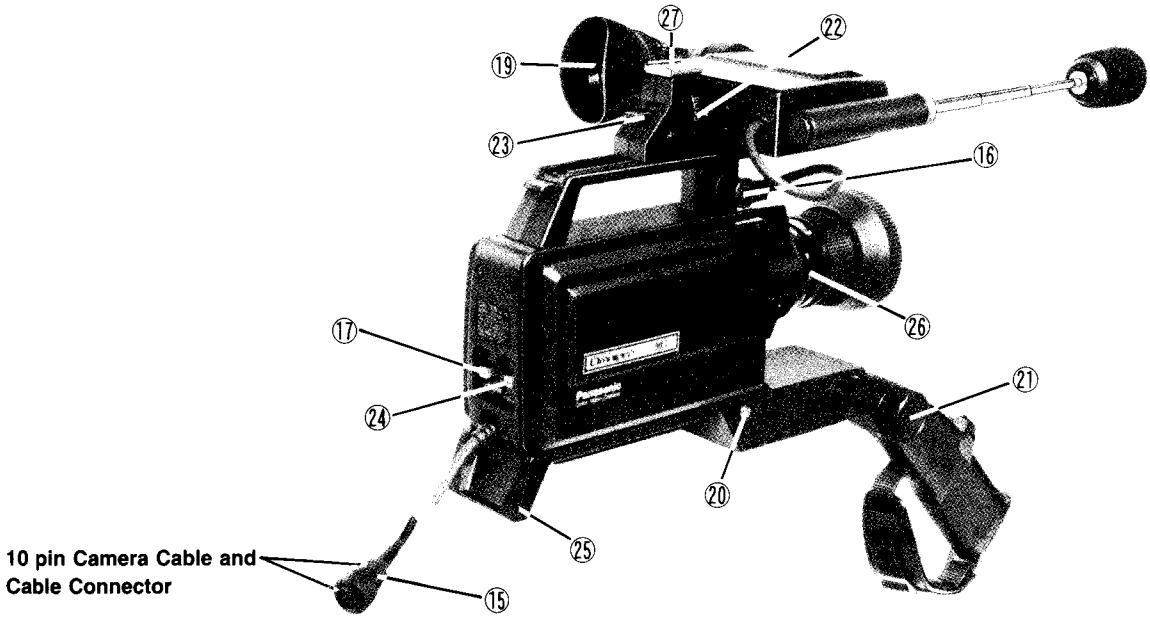


⑯ **Electronic Viewfinder Connector**
This is a receptacle for the connection of the electronic viewfinder.

⑰ **Standby Switch**
This switch is used for longer battery operation. Set this switch to "Standby" when leaving the camera in the pause mode for a long period.
The picture disappears on the Electronic viewfinder when setting this switch to "Standby". When the standby switch is set to "Operate", the camera and portable VCR operate normally.
Also, there are two positions for "OPERATE".
"DISPLAY ON" is for viewing the special displays on the CRT (picture tube).
"DISPLAY OFF" is for inactivating the built-in display circuit.

⑱ **Fader Switch**
This fade-in/out functions in conjunction with the VCR remote control switch on the camera.
When setting this switch to the "ON" position, the picture automatically fades in or fades out every time you push the VCR remote control switch. Fade-in time is approx. 6 seconds and fade-out time is approx. 5.5 seconds.

⑲ **Viewfinder Picture Tube**
The 1" picture tube will show the actual scene the camera "sees" in black and white.

⑳ **External Microphone Input**
Accommodates an external microphone to permit closer audio pick-up. The built-in boom microphone is automatically disconnected when the external microphone is plugged in. Use a microphone with 600 ohm impedance.

㉑ **Adjustable Handle Grip & Knob**
This grip is used for holding the camera and is tiltable for easy holding and operation. The grip should be firmly tightened by turning the Knob.

㉒ **EVF Mounting Roller**
This roller tightens the EVF to the camera head firmly.

㉓ **EVF Lock Lever**
This lever locks the EVF to the camera. Release the lock for sliding.

㉔ **Negative – positive reverse switch**
This switch reverses the video signal. In normal shooting set to the "NORMAL" position. When setting to the "REVERSE" position, negative color films can be seen in normal color conditions. Use the optional adaptor for film installation.

㉕ **Shoulder pad**
This shoulder pad is useful when recording without a tripod and is adjustable for comfortable position.

㉖ **Macro Position**
For close up pictures down to a distance of approx. 1 in. Pull the zoom lever to set the zoom ring to the Macro position.
**Note:** Make sure the illumination on the subject is sufficient for close up shooting.

㉗ **Accessory Shoe**

## B. CONTROL PANEL

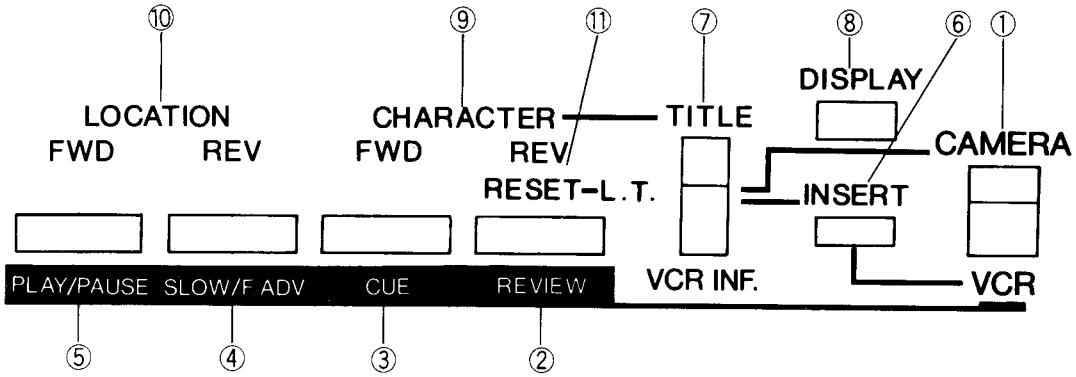


**Camera Remote Control**

① **VCR/CAMERA selector switch**
This switch determines if the recorder will either be recording or playing.
When the switch is in the "CAMERA" position, the Portable VCR is in the RECORD/PAUSE mode.
When the switch is in the "VCR" position the VCR is in the PLAY/PAUSE mode.

② **REVIEW**
During playback, hold this button down to obtain a reverse motion picture at 5 to 9 times of normal speed, (SLP recordings provide the best results).

③ **CUE**
During playback, hold this button down to obtain a forward motion picture at 5 to 9 times of normal speed (SLP recordings provide the best results).

④ **SLOW/F.ADV**
During playback, press and hold this button to advance frames forward or show slow motion pictures.

⑤ **PLAY/PAUSE**
This button only works when the VCR mode selector switch is in the "VCR" position.
Press this button to release or engage the playback pause mode.

⑥ **INSERT**
This is a editing mode to re-record on the previously recorded tape without interference. You can get a smooth transition between two separate recordings on the same cassette. Press this button for RECORD/PAUSE mode and squeeze the camera trigger to add on the new recording.

**Note:** Function ② through ⑥ operate only when the VCR/CAMERA selector switch ① is in the "VCR" position. All the above functions are operable with the PV-5000 portable VCR models only.

**Displays on the CRT — Picture Tube —**

⑦ **Display selector switch**
This switch selects the display on the CRT (picture tube).
- TITLE.....character (alphabet, number, sign)
- L.T. .....stopwatch
- VCR INFORMATION...memory, tape counter, battery

⑧ **DISPLAY**
Press this button to view the displays on the CRT.

⑨ **CHARACTER FORWARD/REVERSE**
Press these buttons to forward or reverse the character sequence after setting the display selector switch to the "TITLE" position.

⑩ **LOCATION FORWARD/REVERSE**
Press these buttons to forward or reverse the location of character after setting the display selector switch to the "TITLE" position.

⑪ **RESET**
The stopwatch reverts to "00:00:00" when pressing this button after setting the display selector switch to the "L.T." position.

# CONNECTION DIAGRAM

## A: Camera Head and portable VCR

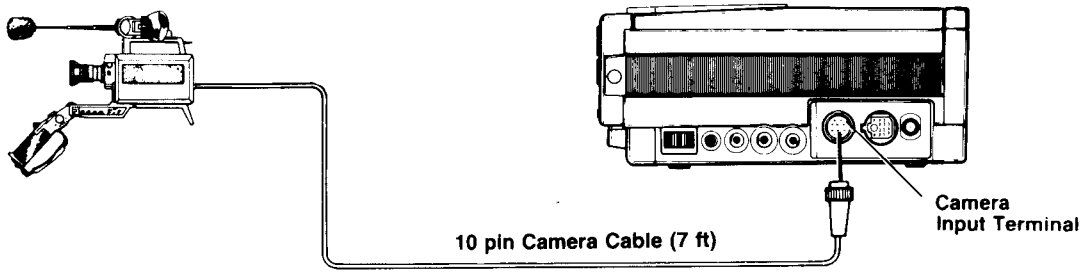


Connect the camera cable to 10-pin socket on portable VCR as illustrated. Be sure to connect the camera to the portable VCR before turning on the power switch on the portable VCR. If the switch is turned on prior to connecting the cable, trouble could develop.

## B: Camera Head, optional power supply and VCR without 10-pin connector

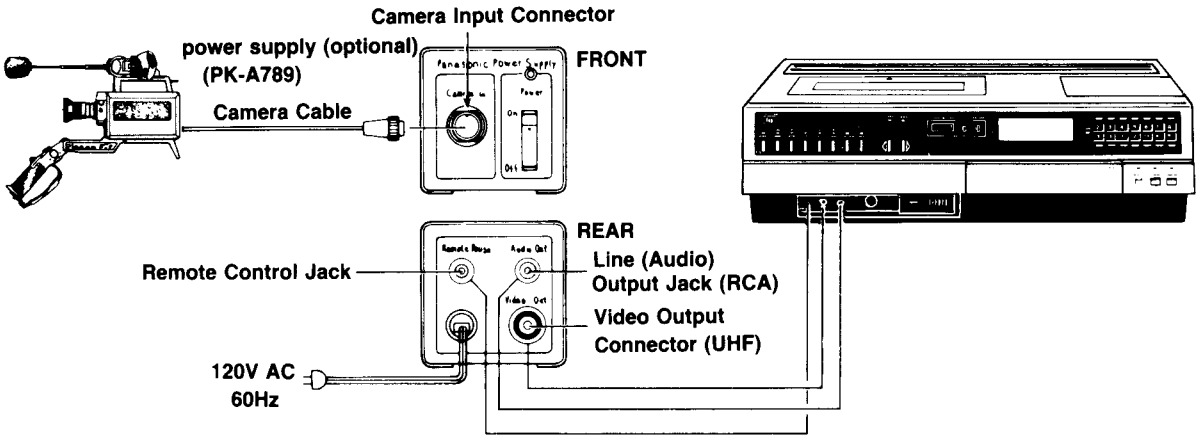


1. Connect the camera cable from the camera head to the 10-pin camera socket on the power supply, (PK–A789). (Make sure that the power switch of the power supply is turned off before connecting the cable.)
2. Connect the video cable from the VIDEO OUT socket (UHF connector) on the power supply to the VIDEO IN connector (RCA phono connector) on the VCR.
3. Connect the audio cable from the AUDIO OUT connector on the power supply to the AUDIO IN connector on the VCR.
4. Connect the VCR remote control cable from the REMOTE connector on the power supply to the REMOTE PAUSE connector on the VCR.
5. Plug the power plug of the power supply into the wall socket (120 Volts).
6. Insert the AC power plug of the VCR into the wall socket.

**Notes:**

1. The camera cable between camera head and power supply or between camera head and portable VCR can be extended by using the optional extension camera cables.
   (Use three 20 feet extension cables to extend upto 67 feet)
2. The connections between the VCR and TV set are explained in the operating instructions for the VCR.

## C: Camera Head and Electronic Viewfinder

1. Attach the Electronic viewfinder to the camera head and tighten the EVF Mounting roller firmly.
2. Plug the connecting cable on the Electronic Viewfinder into the connector on the camera head.
3. Set the picture turning switch to the "R" position.

**Note:**
The above procedure is for mounting the Electronic Viewfinder for right hand and right eye use.
When mounting the Electronic Viewfinder for left hand and left eye use, unscrew the EVF Mounting roller, flip the viewfinder over and reattach by following the same procedure.
Also, place the picture turning switch in the "L" position but only with the power off.

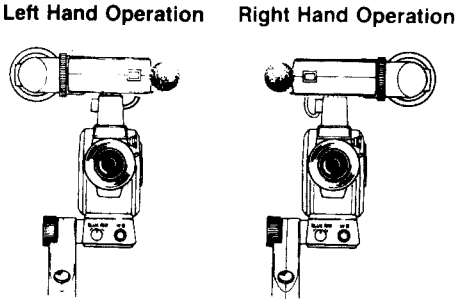


Front View of Camera

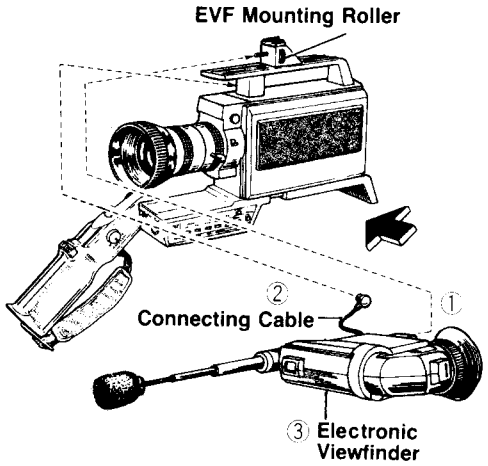


# MOUNTING THE CAMERA ON THE TRIPOD

The camera may be attached to a tripod when you wish to make recordings while not holding the camera or if you need to keep the camera very steady while recording.

**MOUNTING THE CAMERA ON A TRIPOD**
Mount the camera with shoulder pad onto the tripod by screwing the mounting screw on the tripod (standard 1/4"-20 thread) into the mounting hole on the shoulder pad.
Also slide the EVF backward for easy viewing of EVF picture.

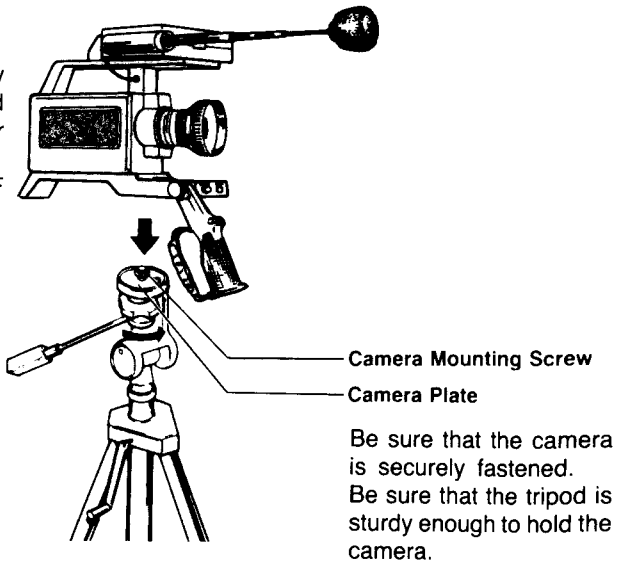


Be sure that the camera is securely fastened.
Be sure that the tripod is sturdy enough to hold the camera.

# OPERATING PROCEDURE

1. Connect the camera and portable VCR as previously shown.

2. Remove the lens cap.

3. Turn the power switch of the VCR on, and press the Rec and Play buttons simultaneously.

   • On some VCR models you may have to switch the input selector to the camera position.
   **Note:** To use the Camera Remote Control.

4. Confirm that the VCR remote indicator (green LED) on the Electronic Viewfinder is turned off. If the green LED is on, depress the VCR pause switch on the camera handle grip. (If the green LED lights, actual recording is being made.)

5. Select the Color Temperature Correction switch for indoor or outdoor use.

6. Set the Standby switch to the "DISPLAY ON" position. For display function and its operation

   **Note:**
   To save power while preparing to record, it is better to use the STANDBY SWITCH in order to only preheat the pick-up tube of the camera to save battery power.
   Also, to save power during operation, set the Standby switch to the "DISPLAY OFF" position when the displays on the CRT are not necessary and you wish to view the EVF picture only.

7. Confirm that the orange LED indicator is not illuminated. This indicates that light intensity to the camera lens is proper.
   Orange LED on.....need more incoming light.

8. Press the Power Zoom Switch ("T" side) for maximum close-up. Adjust lens focus for the sharpest picture. Focus will now track over the entire zoom range.

9. Aim the camera at a white object (never at a light source). White lens cap may be placed on the lens for outdoor shooting if there is no white object. Push the A.W.C. switch to adjust the white balance. And wait for the A.W.C. indicator on the EVF to glow green.

   **Note:**
   1. When the camera is first turned on, permit the camera to warm up for approx. 30 seconds before adjusting white balance.
   2. It is recommended that the A.W.C. switch is repushed to adjust the white balance every time a new scene is selected.

10. Depress the VCR pause switch on the camera handle grip.
    The remote pause indicator light will light as the recorder begins to record.

11. Depress the VCR pause switch on the camera handle grip to pause the recorder anytime. Depress the switch again to resume recording.

12. Instant Replay.
    To watch the program just recorded, rewind the tape, then press the Play button. The playback picture appears automatically on the viewfinder of the camera when connected to the portable VCR. When the power supply is used this feature does not function.

13. STANDBY Setting
    Employ the STANDBY switch to avoid unnecessary power consumption when you expect to pause the recording for more than a couple of minutes.

    1. Pause the recording by pressing the VCR pause switch on the camera.
    2. Set the standby switch to the "STANDBY" position during the pause mode.
    3. Set the standby switch to the "DISPLAY ON" or "DISPLAY OFF" position just before recording is resumed.Wait for the viewfinder picture to appear.
    4. Resume the recording by repressing the VCR pause switch on the camera handle grip.

    Please note that video noise during playback may appear on the monitor if you do not follow this procedure. VCR or Camera operations can't be performed when the camera is set to the "STANDBY" position and operating with a portable VCR.

    **Note:**
    1. Focus should be adjusted all the way at the zoomed-in (telephoto) position. Focus should then track over the entire zoom range. When the camera is aimed at a new scene or object, refocusing will be required.
    2. Always replace the lens cap when the camera is not in use.

# DESCRIPTION OF FADE FUNCTION

● **Fade IN/Fade OUT**

When the Fader Switch is ON:
1. The picture will "fade in" everytime the camera trigger is squeezed to start recording.
2. The picture will "fade out" everytime the camera trigger is squeezed to pause the recorder.

## FADE IN

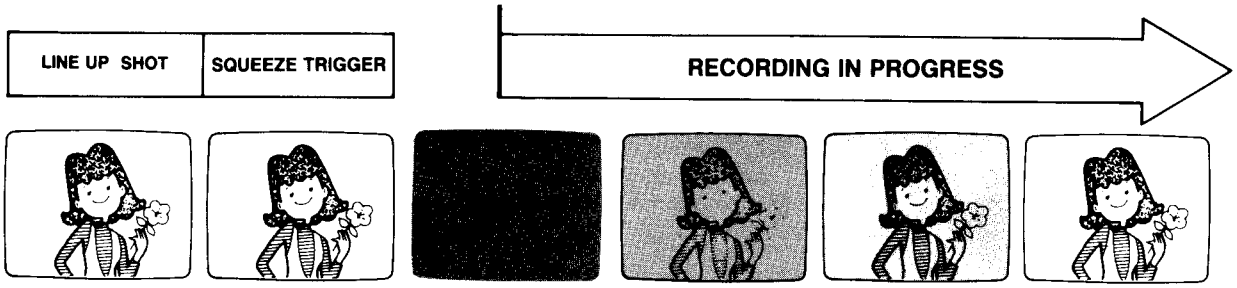


With the fader switch on, the tape does not start rolling until the picture in the viewfinder is fully faded out. Then tape rolls as the picture fades in.

## FADE OUT

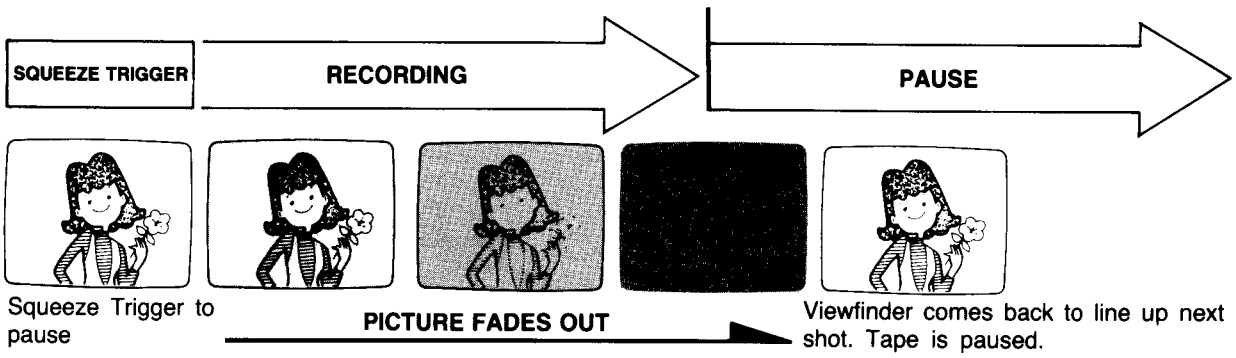


With fader switch on, the recorder does not pause until the picture has fully faded out. After the recorder pauses, the viewfinder picture returns in order to line up the next shot.

# USING THE REMOTE CONTROL FUNCTIONS

When the camera is connected to the portable VCR, VCR functions (PLAY/PAUSE, SLOW/F.ADV,CUE,REVIEW,INSERT) can be controlled from the camera which incorporates the microcomputer system. Also, all playback functions can be viewed in the electronic viewfinder. For these operations, place the camera remote switch on the VCR to the "ON" position.

**OPERATION**

1. Connect the camera to the recorder.
2. Turn the recorder power "ON"
3. Set the recorder's CAMERA REMOTE switch "ON".

**TO RECORD**

1. Place the VCR/CAMERA switch in the "CAMERA" position.
2. Use the camera handle grip trigger to engage or release pause.

**TO PLAYBACK**

1. Place the VCR/CAMERA switch in the "VCR" position.
2. Use the PLAY/PAUSE button to engage or release pause.
3. Use CUE or REVIEW to locate a particular segment.
4. Use SLOW/F. ADV as desired.

**TO STOP OPERATION**

1. Set the camera remote switch of the recorder to "OFF".
2. Now, VCR rewind or STOP function can be activated.

**TO INSERT**

If you wish to insert a new video section to a previously recorded tape without erasing the original sound recording,
1. Place the VCR/CAMERA selector in the "VCR" position.
2. Use CUE or REVIEW to find the particular section.
3. Press the "INSERT" button to place the VCR in the RECORD/PAUSE mode (INSERT/PAUSE mode).
4. Squeeze the camera handle grip trigger to add on the new video recording.
5. Use the camera handle grip trigger to engage or release pause.

**Note:**
1. STANDBY has top priority in any mode.
2. Switching the VCR/CAMERA selector automatically engages the pause mode — giving the user utmost control.
3. If the safety tab of the cassette is missing, no recording can be made.
4. Recordings made in SLP provide the best looking CUE, REVIEW and STILL pictures.
5. If the tape comes to its end while the remote control is used in RECORD/PAUSE mode or INSERT/PAUSE mode — the recorder's power switch will automatically turn off.
6. When the "INSERT" button is pressed and VCR is in the RECORD/PAUSE mode, VCR reverts to PLAY/PAUSE mode when the tape counter reaches "0000" and the Memory switch of the VCR is "ON".
7. Push the INSERT button one more time when you change the standby switch position from the "DISPLAY OFF" to the "DISPLAY ON"during INSERT/PAUSE mode and can't start the new video recording by the camera handle grip trigger.

※ All the above functions are operable with the PV-5000 portable VCR models only.

# DISPLAYS ON THE ELECTRONIC VIEWFINDER CRT

When the camera is connected to the portable VCR, the following indications can be made to appear on the CRT. Be sure to set the standby switch to the "DISPLAY ON" position.

**1. VCR INFORMATION**

Set the display selector switch to the "VCR INF" position.
VCR INFORMATION can't be recorded and is not affected by the VCR/CAMERA selector switch.
VCR INFORMATION can be seen in the Electronic viewfinder.

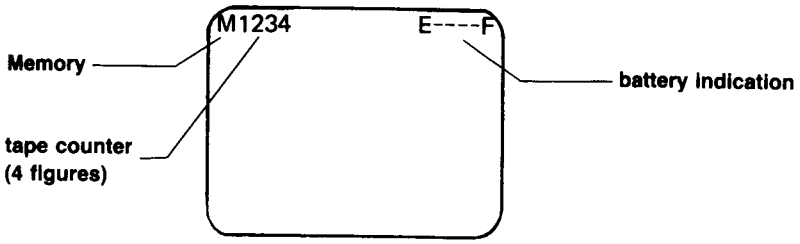


1—1. Tape counter & Memory

Tape counter indicates how far the tape has moved. It is very useful for locating the beginning of programs. Memory and tape counter will be indicated in conjunction with the liquid crystal display counter on the VCR.

1—2. Battery indication

E ---- F
E --- F
E -- F
E F

The battery indicator displays the charge capacity of the battery pack within the recorder. Hyphens between "E" and "F" are extinguished as the charge capacity reduces. The last hyphen flashes just before the VCR turns itself OFF to protect the battery.

**2. STOPWATCH**

Stopwatch will be displayed on the CRT and can be recorded when the display selector switch is placed in the "L.T." position. Stopwatch starts or stops every time the camera trigger is squeezed so that you can recognize the recording time. Be sure to place the VCR in the RECORD/PAUSE mode by switching the Control Panel CAMERA/VCR switch to the "CAMERA" position. Should you decide not to record the STOPWATCH display, simply push the display button ⑧ on the Control Panel. Pushing this display button again will recall the stopwatch display. The stopwatch display will be recorded when displayed in the Electronic Viewfinder and the green LED pause indicator is lit.

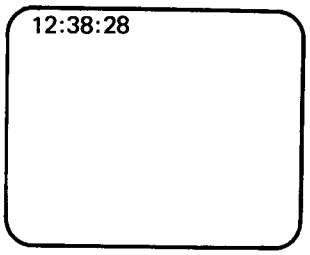


stopwatch display
12 minutes 38 seconds and
$\frac{28}{100}$ seconds

**TO RESET**

Press the "RESET" switch before starting the recording or when the VCR is in the RECORD/PAUSE mode. Accumulating the stopwatch time is possible unless the "RESET"switch is pressed.

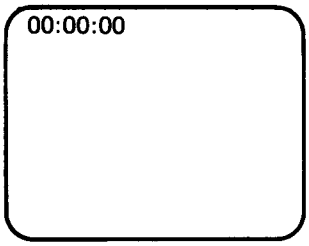


When the stopwatch reaches "59:59:99", it reverts to "00:00:00".

3. TITLE

You can produce your own titles by placing the display selector switch in the "TITLE" position.
Titles can be recorded. Be sure to place the VCR in the RECORD/PAUSE mode (Control Panel Camera position).
60 compartments are supplied as shown below.

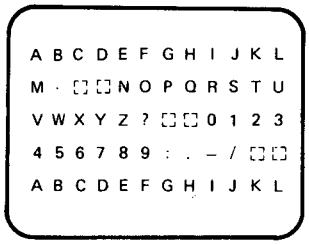


5 rows

12 rows

Sequence of characters (alphabet, number, sign)

No character display

A B C D E F G H I J K L M ·
N O P Q R S T U V W X Y Z ?
0 1 2 3 4 5 6 7 8 9 : . – /

When the display selector switch is set to "TITLE" position, the letter "A" appears first at the left side corner of the upper portion as shown.

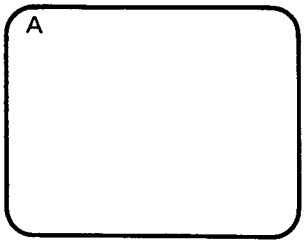

## TO FORWARD THE LOCATION

Press the "LOCATION FORWARD" button to forward the location. When the character reaches the right side corner at the bottom of the CRT, the character reverts to the "starting point".

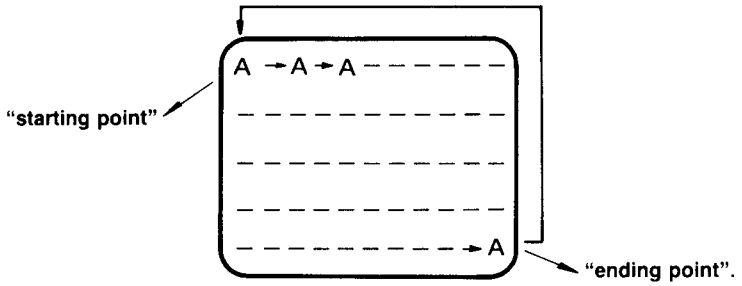


## TO REVERSE THE LOCATION

Press the "LOCATION REVERSE"button to reverse the location.

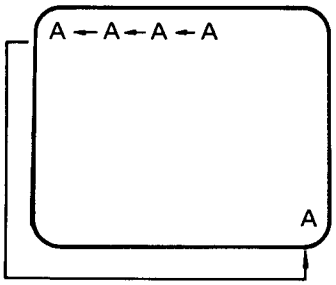


When the character returns to the "starting point" the character moves to the "ending point" as shown.

## TO CHANGE THE CHARACTER

Press the "CHARACTER FORWARD" button or "CHARACTER REVERSE" button to forward or to reverse the character sequence.
These two buttons do not change the location of the character.

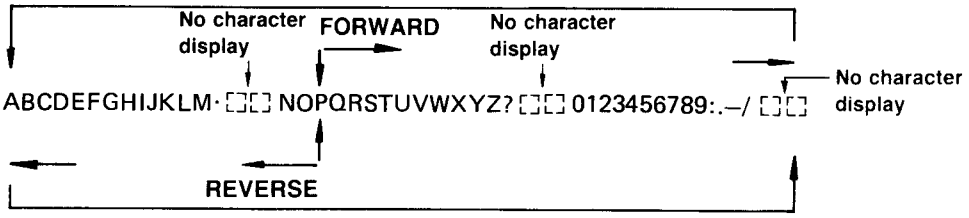


For instance, in case the character "P"is being displayed, "Q" appears on the CRT when the "CHARACTER FORWARD" button is pressed. Also, "O" appears when the "CHARACTER REVERSE" button is pressed.
In this way, everytime the "CHARACTER FORWARD" or "CHARACTER REVERSE" button is pressed, the character will be changed in sequence.
When the character reaches the last during FORWARD, it returns to the "A".
Also,when the character reaches the "A" during REVERSE it returns to the last.

**Note:**

1. While producing a title, once the display selector switch is set to the position other than "TITLE" position, or when the standby switch is set to "STANDBY" or "DISPLAY OFF", or when the VCR/CAMERA selector switch is set to "VCR" position, all the characters on the CRT will be erased.
2. "LOCATION FWD" button, "LOCATION REV" button, "CHARACTER FWD" button and "CHARACTER REV" button are push-push type. Press and hold these buttons to gain quick access to the desired location or character.
3. If you change the standby switch position to the "DISPLAY ON" from the "DISPLAY OFF" during recording or playback, VCR becomes pause mode and stopwatch reverts to "00:00:00".

# BEFORE SERVICING

| Condition | Main Cause and Remedy |
|---|---|
| No picture | ● Check if the Power Supply is plugged in (in case the Power Supply is being used).<br>● Check if the Standby switch is set to the "Operate"position.<br>● Check if the VCR power switch is on – and the battery is charged.<br>● Check if the lens cap is on.<br>● Check if all necessary cables are connected correctly. |
| Color Balance not proper | ● Check if the lighting is adequate.<br>● Check the color temperature correction switch for proper setting.<br>● AWC may need to be readjusted. |
| Color rendition not proper | ● Check if the color TV is adjusted properly.<br>● Check if the lighting is adequate.<br>Insufficient lighting can considerably alter color rendition. |
| Viewfinder picture is upside down | ● Turn camera power off. Then place the picture turning switch in the proper position. |
| VCR does not pause immediately when the trigger is squeezed. | ● This is normal if the Fader switch is on. |
| Displays do not appear on the CRT | ● Check if the "DISPLAY"button is pressed.<br>● Check if the VCR is placed in the proper mode.<br>● Check if the standby switch is placed in the "DISPLAY ON" position. |
| Camera remote control does not operate. | ● Check if the camera remote switch of the VCR is set to "ON" position.<br>● Check if the VCR/CAMERA selector switch is placed in the proper position. |
| Focus is not sharp | ● Check if the surface of the lens is dirty or dusty.<br>● Check if the lens is properly focused. |
| Color for indoor or outdoor is not correct | ● Check if the color temperature correction switch is properly set.<br>● Color control knob may need to be adjusted. |
| Recording does not operate | ■ When the Remote control is used,<br>● Check if the remote pause cable is correctly connected. (in case a home video recorder is used)<br>● Check if the camera cable is properly connected to the portable VCR. |

**10 Pin Camera Connectcr Diagram**

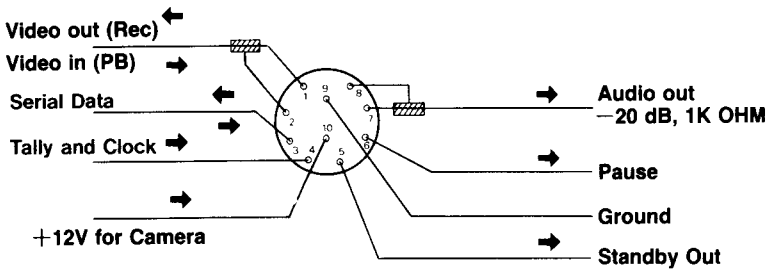

ABBREVIATIONS USED IN THIS MANUAL

ADJ : Adjustment
Adj. : Adjustment
AFC : Automatic Frequency Control
AGC : Automatic Gain Control
AMP. : Amplifier
AVR : Automatic Voltage Regulator
AWC : Automatic White Balance Control
B : Blue
BAL : Balance
B.F.P. : Burst Flag Pulse
BLK : Blanking
BPF : Band Pass Filter
BSC : Blue Sub Carrier
C : Close
CB : Composite Blanking
CBA : Circuit Board Assembly
CP-1 : Clamping Pulse 1
CP-2 : Clamping Pulse 2
CRT : Cathode Ray Tube
CS : Composite Sync
DEF : Deflection
DET : Detector
DIFF AMP : Differential Amplifier
DL : Delay Line
DY : Deflection Yoke
ELIM : Elimination
EVF : Electronic View Finder
FBT : Fly Back Transformer
FET : Field Effect Transistor
FH : 15.75 kHz Horizontal Drive Pulse Frequency
G : Green
GB : Gated Burst Signal
GEN : Generator
H : Horizontal
HCC : High Chrominance Clip
HD : Horizontal Drive Pulse
Hd : Horizontal Drive Pulse (Delayed HD)
HP : Horizontal Parabola Waveform
Hs : Horizontal Saw-tooth Waveform
HSS : Horizontal Scanning Start Pulse
LCC : Low Chrominance Clip
LIN : Linearity
LPF : Low Pass Filter
LVL : Level
MOD : Modulation
OB : Optical Black
OSC : Oscillator
OVF : Optical View Finder
PCB : Printed Circuit Board
PED : Pedestal
R : Red
REMO. CON. : Remote Control
RSC : Red Sub Carrier
SC1 : 0° Phase Sub Carrier
SC2 : 90° Phase Sub Carrier
SD : Shading Correction
SEPA. : Separation
TEMP. : Temperature
V : Vertical
VD : Vertical Drive Pulse
VP : Vertical Parabola Waveform
VS : Vertical Saw-tooth Waveform
VSS : Vertical Scanning Start Pulse
WBLK : Wide Blanking Pulse
YE : Edge Correction Input Signal
YH : Luminance Signal
YL : Low Band Luminance Signal

## GENERAL DESCRIPTION

### (1) SPECIAL TUBE

Special tube's features are shown as follows.

1. Less tube burn than conventional one.
2. Better resolution than conventional tube.
3. Much improved S/N ratio than conventional tube.

The special tube's (K4103) basic principles are same as vidicon. Special tubes are extensively used in closed-circuit TV cameras because of their small size, simplicity and ruggedness. Special tubes make use of the same basic principles as vidicon. This cameras uses a new electrostatic focus magnetic deflection 2/3" tube with an integral stripe filter. A conventional magnetic focus, magnetic deflection tube has an external focus coil (wound inside the deflection coil assembly) through which a DC current flows, forming an electron lens inside the special tube to focus the electron beam on the target. The electrostatic focus, magnetic deflection special tube has extra electrodes (G3, G4, G5) inside the special tube as shown in Fig. 1-a to focus the electron beam on the target. Total power consumption of the camera is reduced by eliminating the power that would have been required for the focus coil, and the power required for deflection is also reduced. The electron beam emitted by the cathode is accelerated by the G2 electrode and pass through a beam limiting aperture (Fig. 1-a) to form a small diameter electron beam. The electron beam is then focused by the electrostatic lens formed by electrodes G3-G4-G5, as shown in Fig. 1-b. This electrostatic lens replaces the focus coil and focus circuit. Electrodes G5-G6 form an independent "collimating lens" that bends the beam so that the landing angle of the electron beam is always perpendicular to the target for good corner resolution. The deflection assembly includes the beam alignment magnets (Fig 1-b) which provide an auxiliary magnetic field to center the electron beam in the tube. Since the effective diameter of the focus lens is small, misadjustment of the beam alignment magnets will result in poor resolution and color shading. Camera alignment, therefore, requires careful adjustment of the beam alignment magnets.

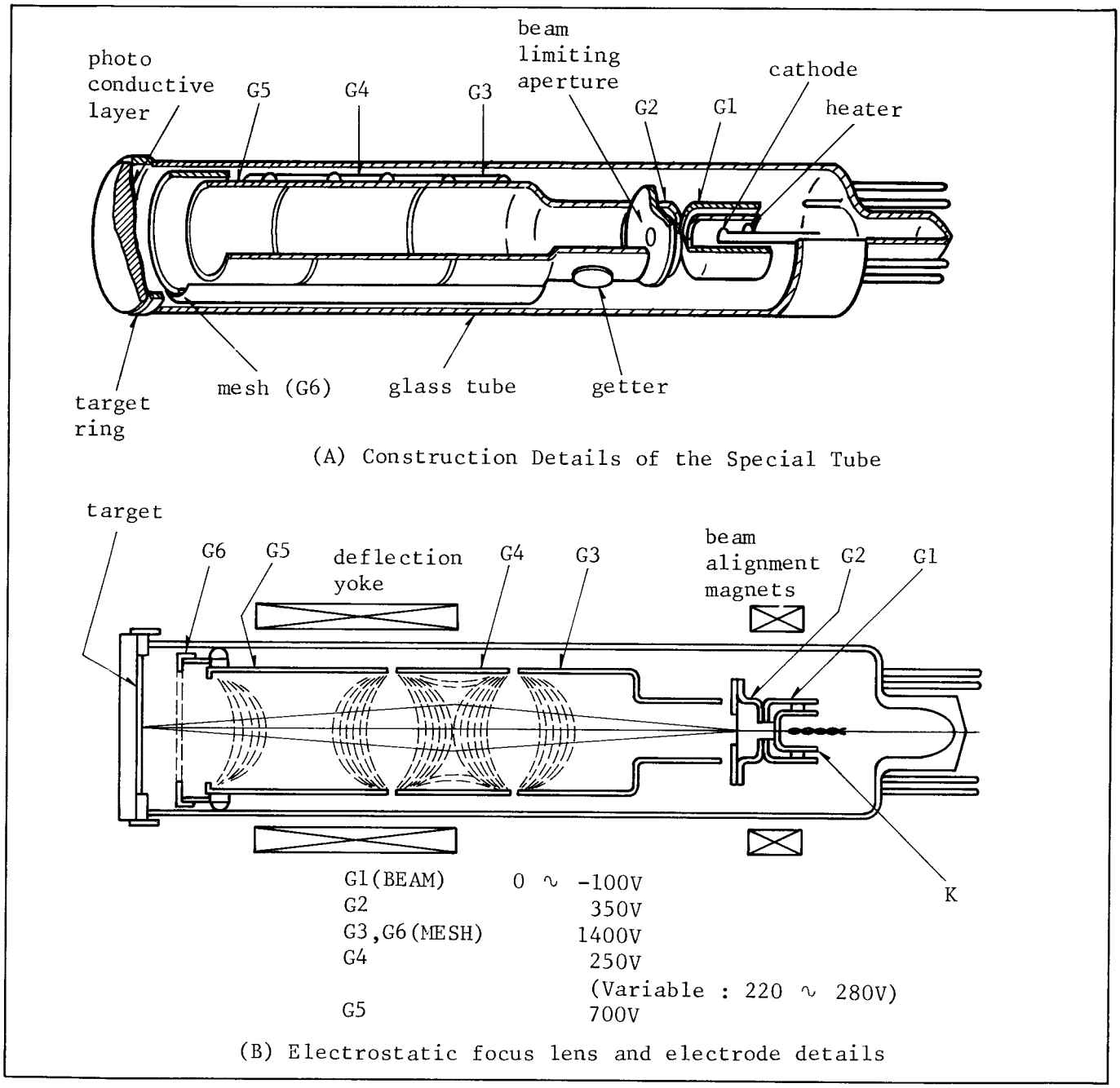


Fig. 1. Special Tube

The most important element in the special tube is the target, which is composed of a face plate made of nessa glass coated on the inner surface with a photo-conductive layer (As, Se, Te), and covered with a thin transparent conducting film (signal electrode).

The lens gathers the light from the scene and focuses it onto the face of the special tube. The photo-conductive layer creates a number of individual target elements. These elements are made up of electrostatic capacitance parallelled by light-dependent resistors (Fig. 2-a) forming an RC time constant. The electrostatic capacitance is basically formed between the nessa glass and the back surface, where the beam strikes the photo conductive layer which acts as a dielectric. The target elements are all connected on one end to the signal electrode. The other end is unterminated and ready to receive the beam.

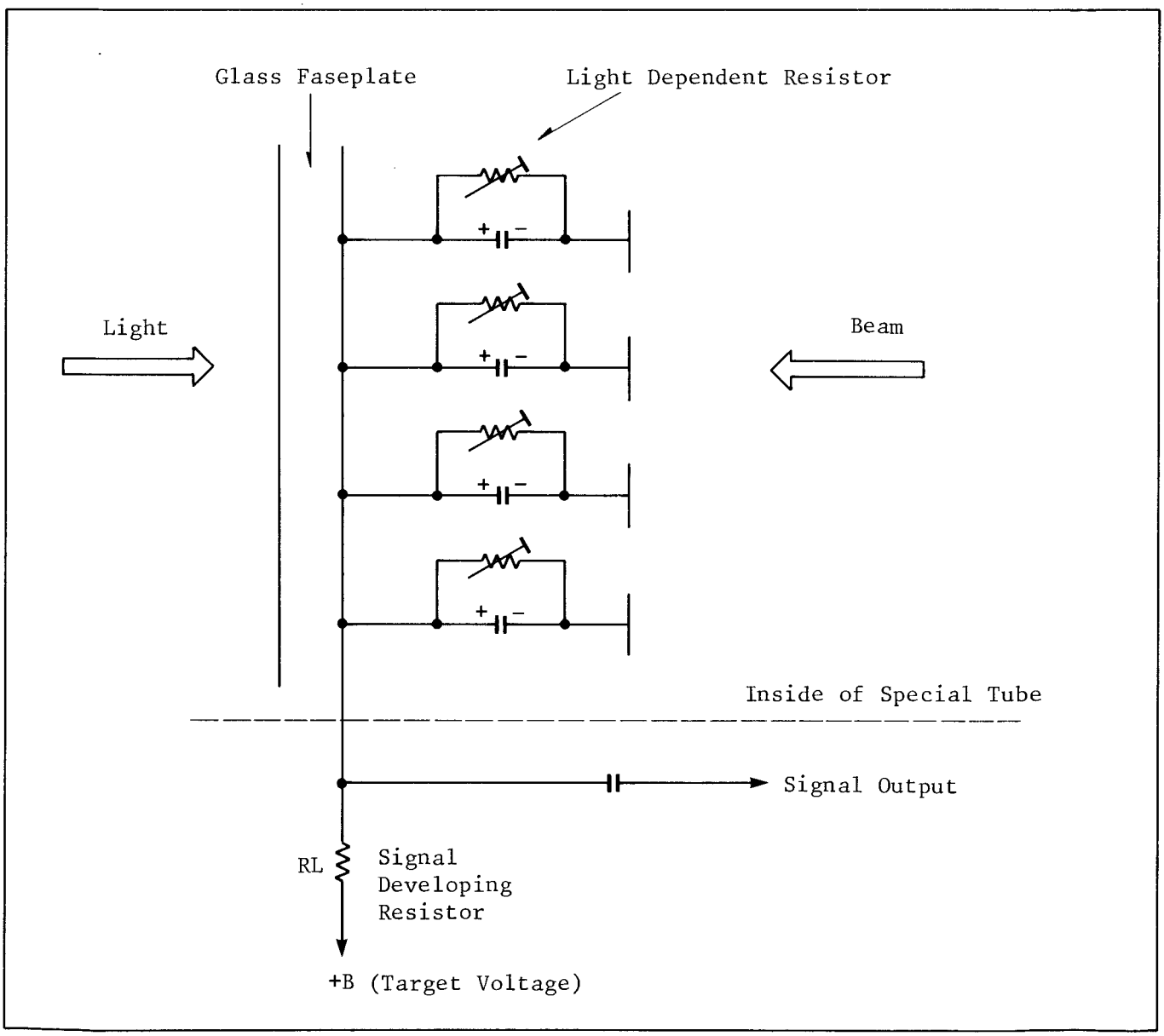


Fig. 2. (A) Target

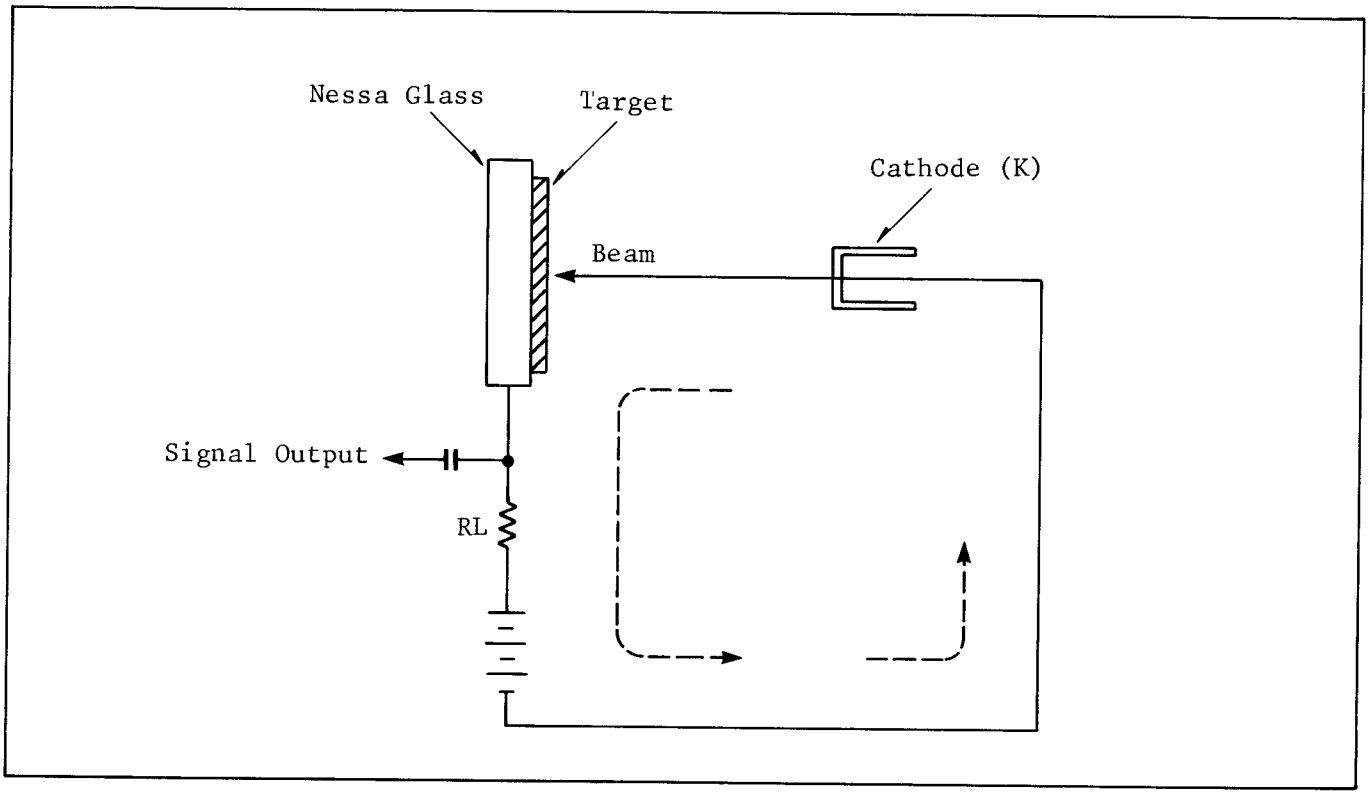


Fig. 2. (B) Electron Path

When there is no light striking the face plate of the Special tube, the light dependent resistors create a high resistance. Whenever light hits the face of target area, the resistance drops--the level depending on the amount or intensity of the light.

When a positive voltage is applied to the target (target potential), all the RC networks or elements will charge as the beam first scans the target area.

When the beam is not in contact with the element, the capacitor will slowly discharge through the light-dependent resistor connected across it. Keep in mind that each element's resistance will vary depending on the light level. On subsequent scans of the beam, the capacitors will recharge back to the target potential. It is this charging current that is sensed to produce the video signal.

When the beam scans the target, electrons are deposited on the positively-charge areas, which will return them to the negative potential of the cathode. This causes current to be produced which flows through the external signal developing resistor RL (see Fig. 2-B), and it's this changing current (dependent on light) which is the converted optical image.

## (2) GAMMA

As light falls on the target, the signal output increases, but not at a linear rate. The relationship of light input to output signal is referred to as the gamma ($\gamma$) or transfer characteristic. Special tubes have a gamma of about 0.9 or 0.95. The cathode ray picture tube has a transfer characteristic of its own, which is 2.2. To get a unified transfer-of-light change, the camera must achieve a gamma of 0.45, the reciprocal of 2.2. (2.2 x 0.45 = 1) This is called gamma correction, and is achieved by means of an electronic circuit.

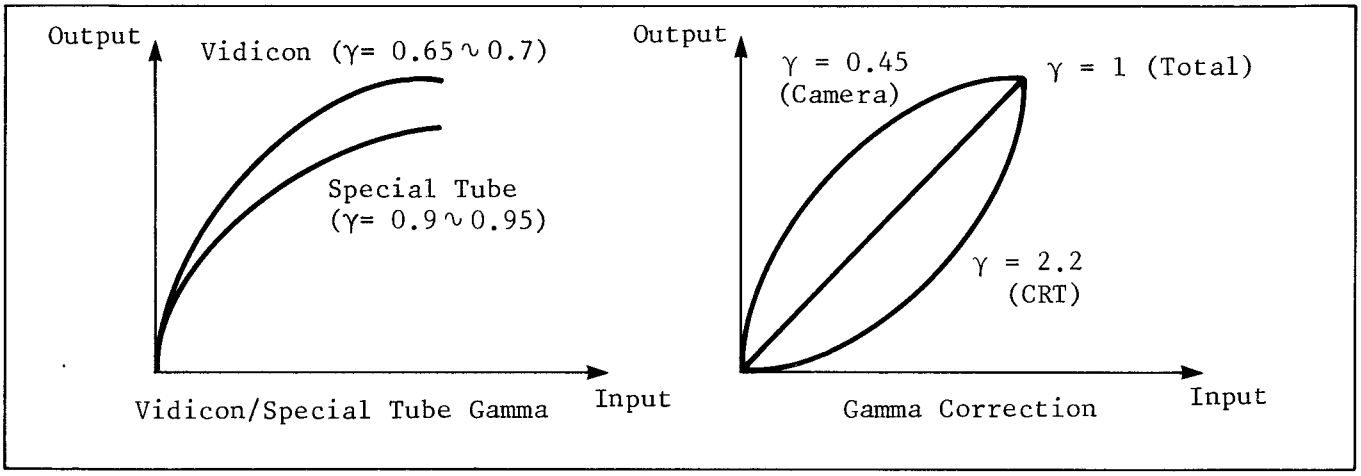


Fig. 3.

## (3) STRIPE FILTER

The operation of the stripe filter on the face plate of the special tube depends on several facts which bear review. The composition of what is perceived as white light is a mixture of many wavelengths, which we can group by wavelength or color, as shown in Fig. 4-(A).

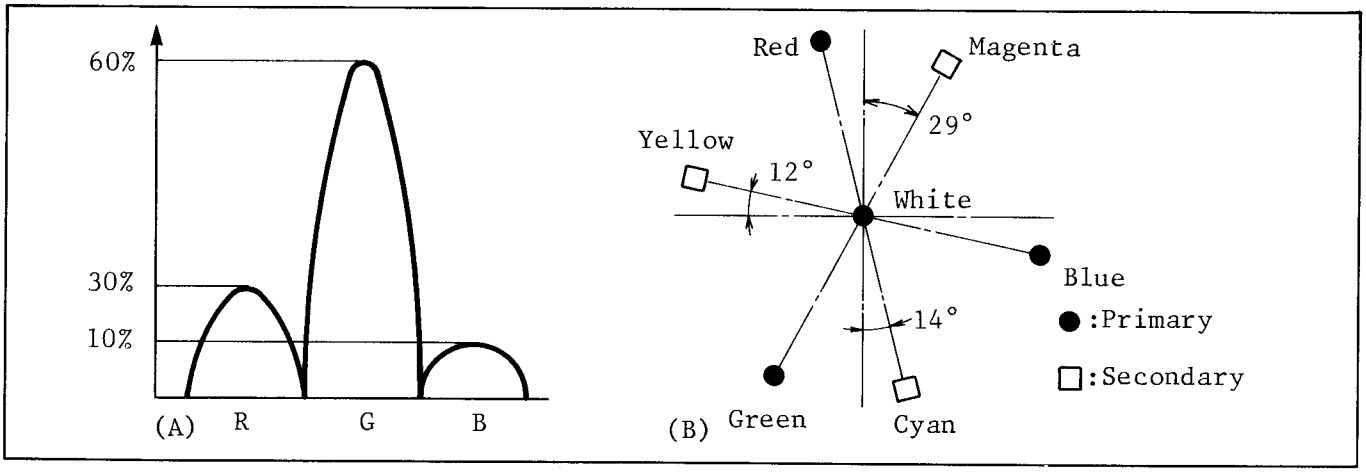


Fig. 4. Amplitude and Phase Relations Between R,G and B.

While it may be apparent that all the wavelengths or colors will pass through a transparent filter, one must consider the operation of a filter of complimentary colors. In a tricolor system of colorimetry (Fig. 4-(B)), any two primary colors may be mixed to form a secondary color which is not one of the original three primary colors but the exact opposite of the unused primary color. White light passed through a filter of this new, secondary color will contain both of the original colors but none of the complementary color. Imagine a filter of yellow, a color which is made from Red and Green (Fig. 4).

Should white light be passed through this yellow filter, Red, Green and some Magenta and Cyan light will pass, but blue light will not pass. Similarly, if a cyan filter were used, all but Red would pass. Lastly, the use of a color filter will of course allow the passage of image details--for example, the shape, outline and reflectance of the objects seen by a lens--if an image were used in place of the white light described above.

The stripe filter special tube is based on these three details:

1. The color of any object can be carried by the information in the three primary colors.
2. When red, blue and green are used as the primary colors, 56% of the visual information and light energy is green. (Fig. 6-(A))
3. A cyan filter will pass green and blue (but not red) (Fig. 5-2) and a yellow filter will pass green and red (but not blue) (Fig. 5-2).

Now let's discuss the color portion of the special tube. When a thin film filter such as that depicted below is placed on the face plate, both the filter stripes and the image from the camera lens will be in focus without the use of additional lenses.

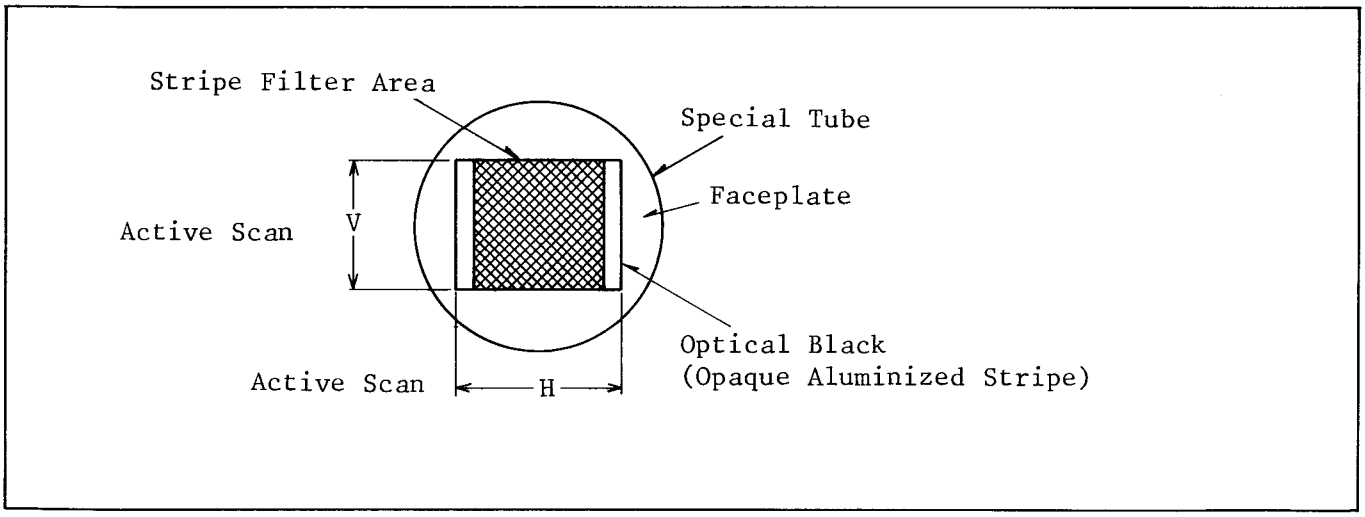


Fig. 5-1. Special Tube Faceplate

With careful design of size of active scan area or size of stripes, horizontal and vertical, the conditions described in Fig. 6 can be obtained.

| COLOR STRIPE FILTER | COLOR PASSED |
|---|---|
| Transparent (Clear) | Red, Blue and Green |
| Cyan | Blue and Green |
| Yellow | Red and Green |
| Cyan and Yellow | Green |

Fig. 5-2.

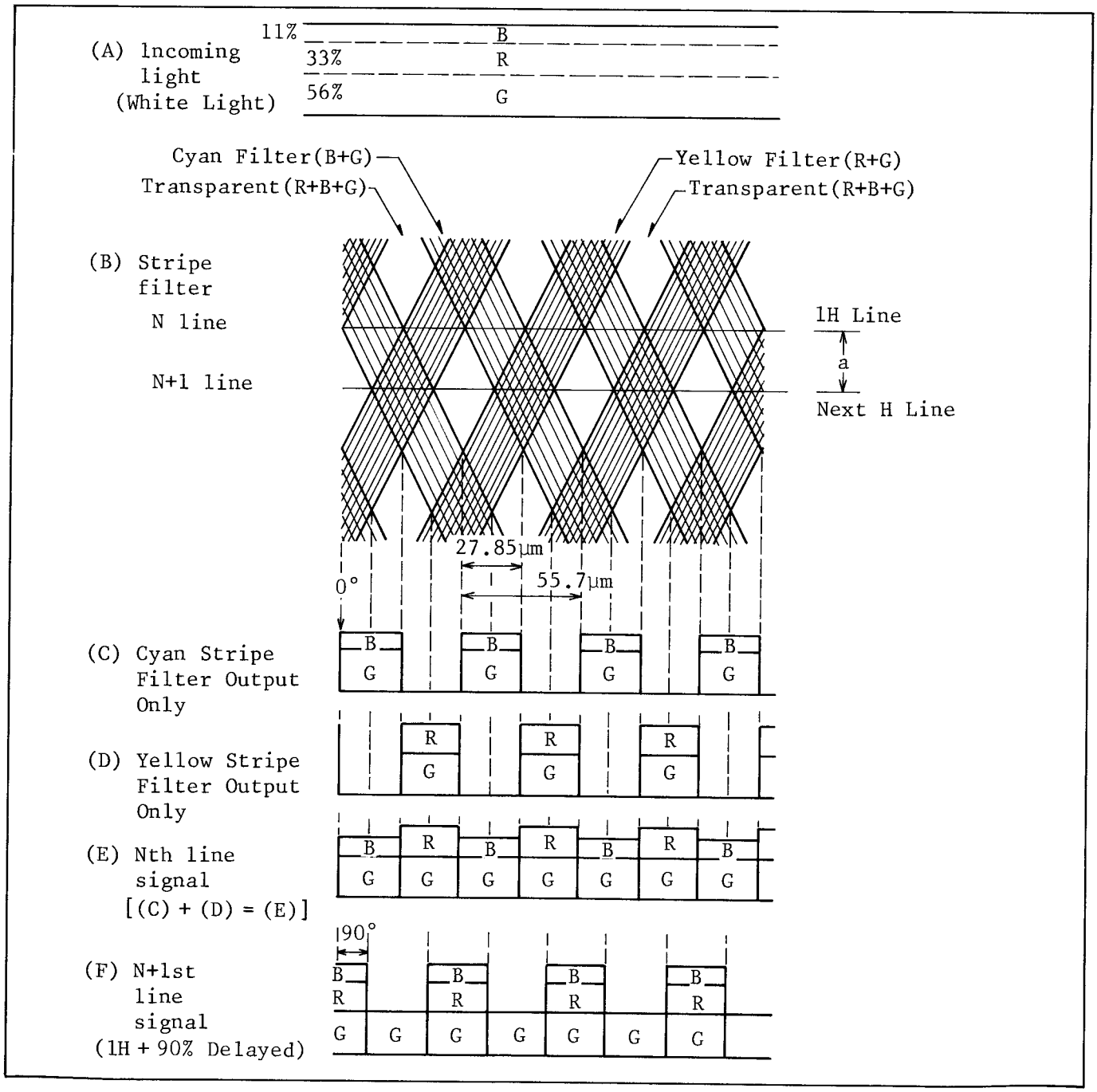


Fig. 6. Signal from Special Tube

The tube alignment and rotation assure that the horizontal scan exactly bisects the angle formed by the stripes, while vertical scan determines that each horizontal scan falls as shown in Fig. 6-(B). Further more, the width of each stripe and of the horizontal scan determines the characteristic frequency of the process, in this case, 4.3MHz. As light falls on the stripes, the contrast pattern formed by stripe/no stripe/stripe will optically generate an R.F. carrier above the fundamental luminance information (picture detail). This carrier rides above the luminance.

As shown in Fig. 6-(B), the integral stripe filter consists of a cyan/transparent stripe filter section and a yellow/transparent stripe filter section.
These stripe filters are so arranged as to be of the same pitch in the horizontal scanning direction, and of equal angle in the vertical direction. The special tubes even and odd scanning lines pass the elements of the stripe filters that are arranged in a fixed pattern. Let's assume that a white light of uniform level containing proportioned green (G), red (R) and blue (B) reaches the special tube (Fig. 6-(A)), and the cyan and yellow stripe filter is scanned as shown in Fig. 6-(B). The cyan filter cuts off the R light which is complimentary to cyan (Fig. 6-(C)), and the yellow filter cuts off the B light which is complimentary to yellow (Fig. 6-(D)). At the N scanning line, the signal E contains the modulated R and B signals, and G signal.
At the next horizontal scanning line N + 1, the signal F also contains the modulated R and B signals and G signal. The stripe filters have the same pitch in the horizontal scanning direction and the same angle in the vertical directions so that there is a carrier phase difference of 90° between the N line and the N + 1 line modulated signals. This modulation frequency for the R and B signals can be calculated from stripe width, pitch, and scan width and velocity, in this case, 4.3MHz.

The incoming light is thus converted by the integrated stripe filter into a signal which contains R and B signals modulated by 4.3MHz. This signal is sent to the pre-amplifier, where it is amplified (Fig. 7-(G)). The amplified signal G from the pre-amplifier is sent to a low pass filter circuit, which passes only the luminance (YH) signal (Fig. 7) H making up the G signal. The amplified signal G is also supplied to the band-pass filter (BPF) whose center frequency is 4.3MHz, through which only the modulated signal 1 passes.

The modulated signal 1 is sent to the 90° phase shift circuit and the 1H (1 line) delay circuit, from which 90° phase-shifted and 1H-delayed, modulated signals J and K are obtained. The modulated R (Rc) signal (L) is obtained by adding the modulated signals (J) and (K), and a modulated B (Bc) signal (N) is obtained by subtracting the modulated signals (J) and (K). The Rc and Bc signals obtained by addition and subtraction are supplied to the detectors, from which R signal (M) and (B) signal (O) are obtained.

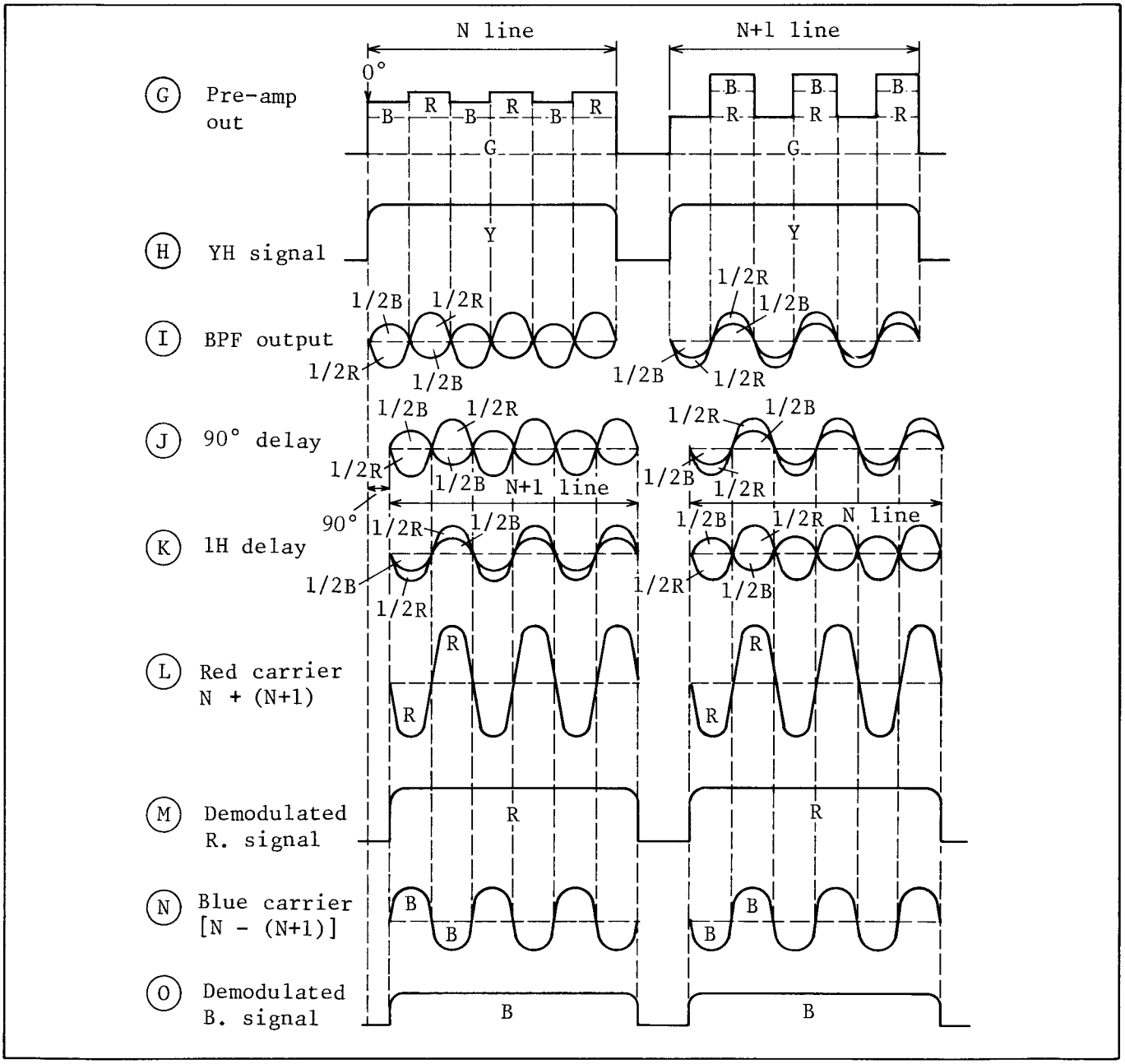


Fig. 7-A. Detection of Y,R and B. signals

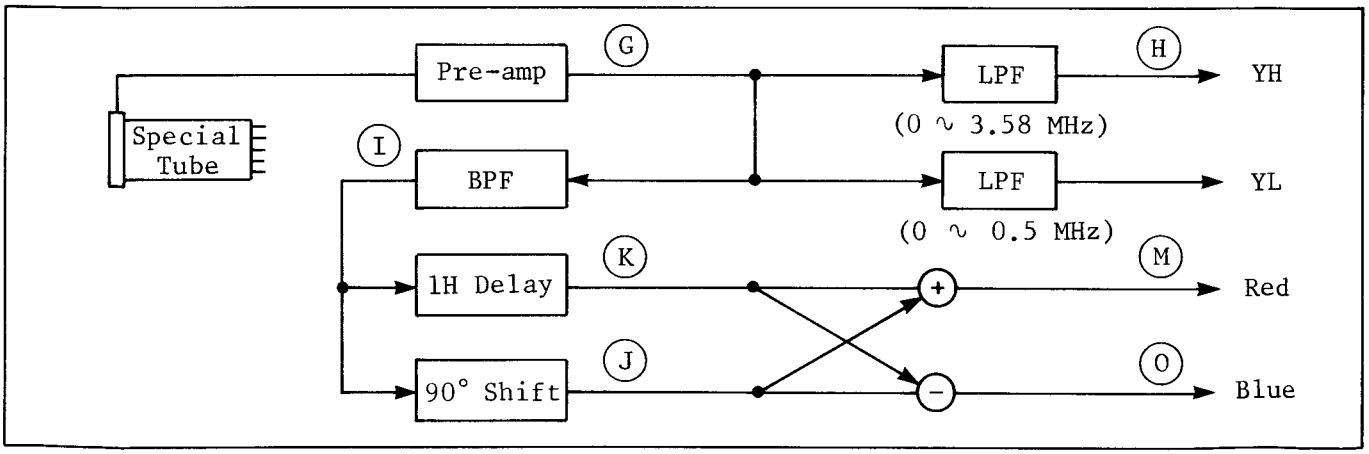


Fig. 7-B.

## (4) CORRECTION CIRCUITS

### A. Color Temperature Correction

There are two main aspects we have to consider when we think of light. The first is the brightness or intensity (Fig. 8) and the second is the color temperature.

Rough Values of Brightness

The figures in this table are approximate values for reference.

Lighting necessary
10 footcandles
(100 lux)

Practical range

Standard
Illumination
90 footcandles
(900 lux)

1,000 footcandles
(10,000 lux)

| [foot-candle] | [lux] | [Place or Daylight] |
|---|---|---|
| 10 | 100 | |
| | 100∿200 | Commercial stairways |
| | 200∿300 | Indoor golf range |
| | 400∿500 | Office with fluorescent lamps |
| | 500∿700 | Department store counter |
| | 700∿800 | Assembly line |
| 100 | 1,000 | |
| | 1,000 | Sunlight one hour before sunset, clear day |
| | 1,000 | Window side of an office with fluorescent lamps |
| | 2,000 | Sunlight one hour after sunrise on a cloudy day. |
| 1,000 | 10,000 | |
| | 25,000 | Sunlight at 10AM, cloudy day |
| | 32,000 | Sunlight at noon, cloudy day |
| | 35,000 | Sunlight at 3PM, clear day |
| | 65,000 | Sunlight at 10AM, clear day |
| 10,000 | 100,000 | Sunlight at noon, clear day |

Fig. 8.

Light is made up of a spectrum of frequencies or colors, with violet being the lowest frequency and red being the highest (Fig. 9).

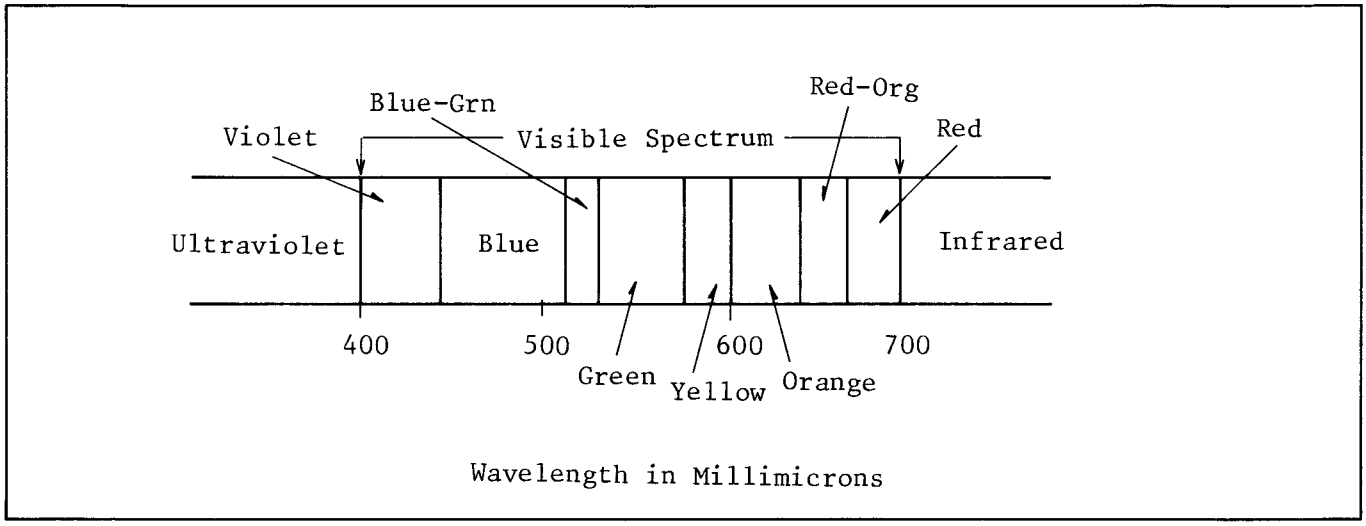


Fig. 9.

The human eye has a unique ability to perceive color correctly even when the light source is changed (i.e. when color temperature varies) from pure white to red-white or blue-white. However, machines do not have such ability, and "see" even the slightest color change.

The color mix of what we perceive as white light (Fig. 10) will change

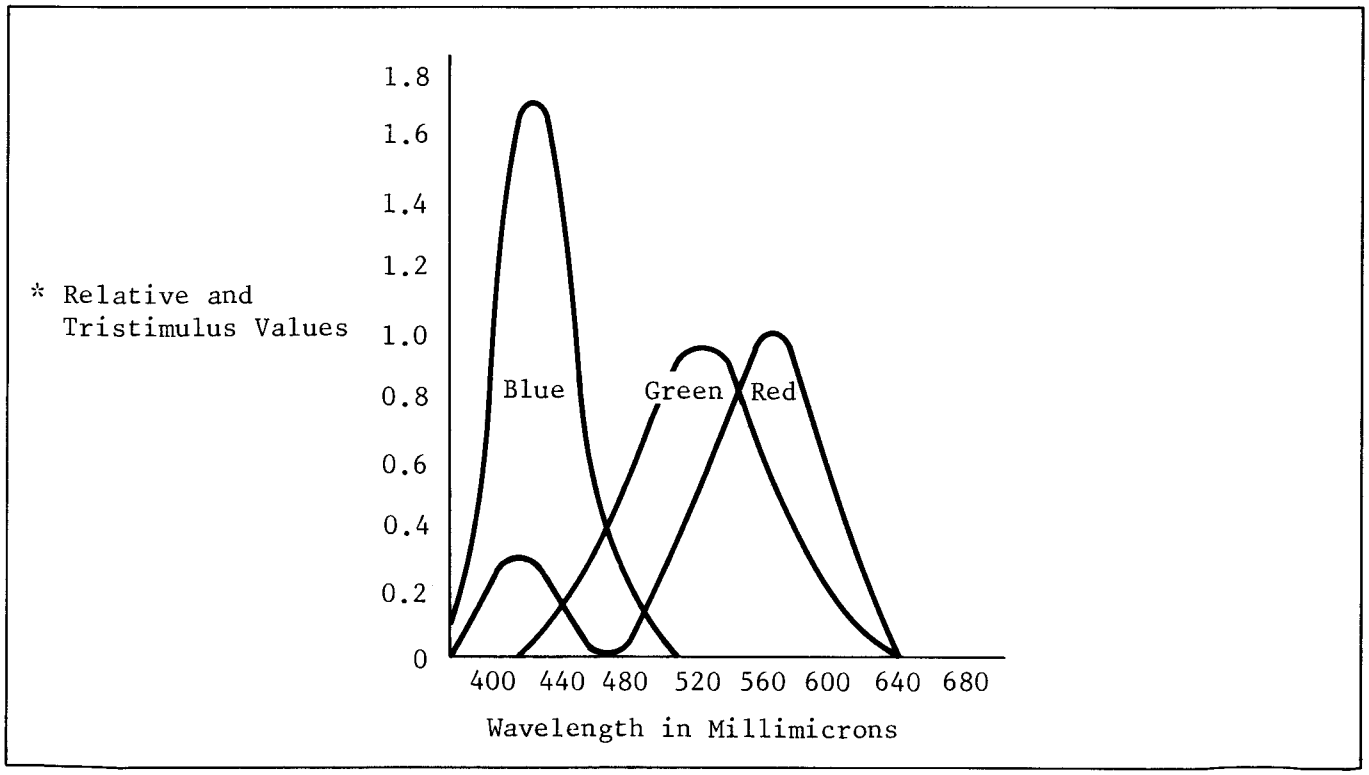


Fig. 10.

* Tristimulus Values:

The amount of the three primary colors required to produce white light.

as we move from indoor artificial light to sunlight, objects illuminated by these different light sources will change the proportions of the red and blue signals and the cameras output will appear to be miscolored. Cameras are normally adjusted to 3200° Kelvin Temperature (Fig. 11).

| Light Source | | Normal Color Correction | Color Temperature |
|---|---|---|---|
| Studio lighting such as Halogen lamp and tungsten lamp | | | 3200°K |
| Room light | Incandescent Lamp | | 4500°K |
| | Fluorescent | | 5000°K |
| Outdoor scene (sunny or overcast) | | | 5500°K |

Fig. 11.

It is for this reason that we have an automatic white balance control switch and color control knob mounted on the back of the camera. With these controls, the proportions of the red and blue signals can be changed to achieve a better white balance. At 3200°K we have a more reddish picture, so less gain is required in the red channel and more in the blue channel. At 5000°K or 5500°K, we have a more blueish picture and less blue gain is needed and more red.

## B. V Edge Color Error Correction

As described, the Rc and Bc signals are separated from each other by addition and subtraction of the Rc/Bc signal delayed one horizontal line and the undelayed Rc/Bc signal.

When the camera views a dark-to-bright, or bright-to-dark transition as shown in Fig. 12, the undelayed Rc/Bc signal appears as in Fig. 12 (C), and the Rc/Bc signal delayed one line (1H) appears as in (D). When we make the transition from dark to bright the Rc/Bc (C) and (D) signals are not of equal level on the N + 1 line and an error signal (green) is created along the vertical edge of the transition.

Thus it is necessary for us to supply a positive vertical (V) edge correction signal (E) to control the level of the N + 1 line (A). This provides vertical correlation between Rc/Bc signals delayed and not delayed ((D) and (C)) prior to color separation. If the transition is from bright to dark, the error signal will be magenta and a negative V correction signal will be used. We will discuss this in more detail later.

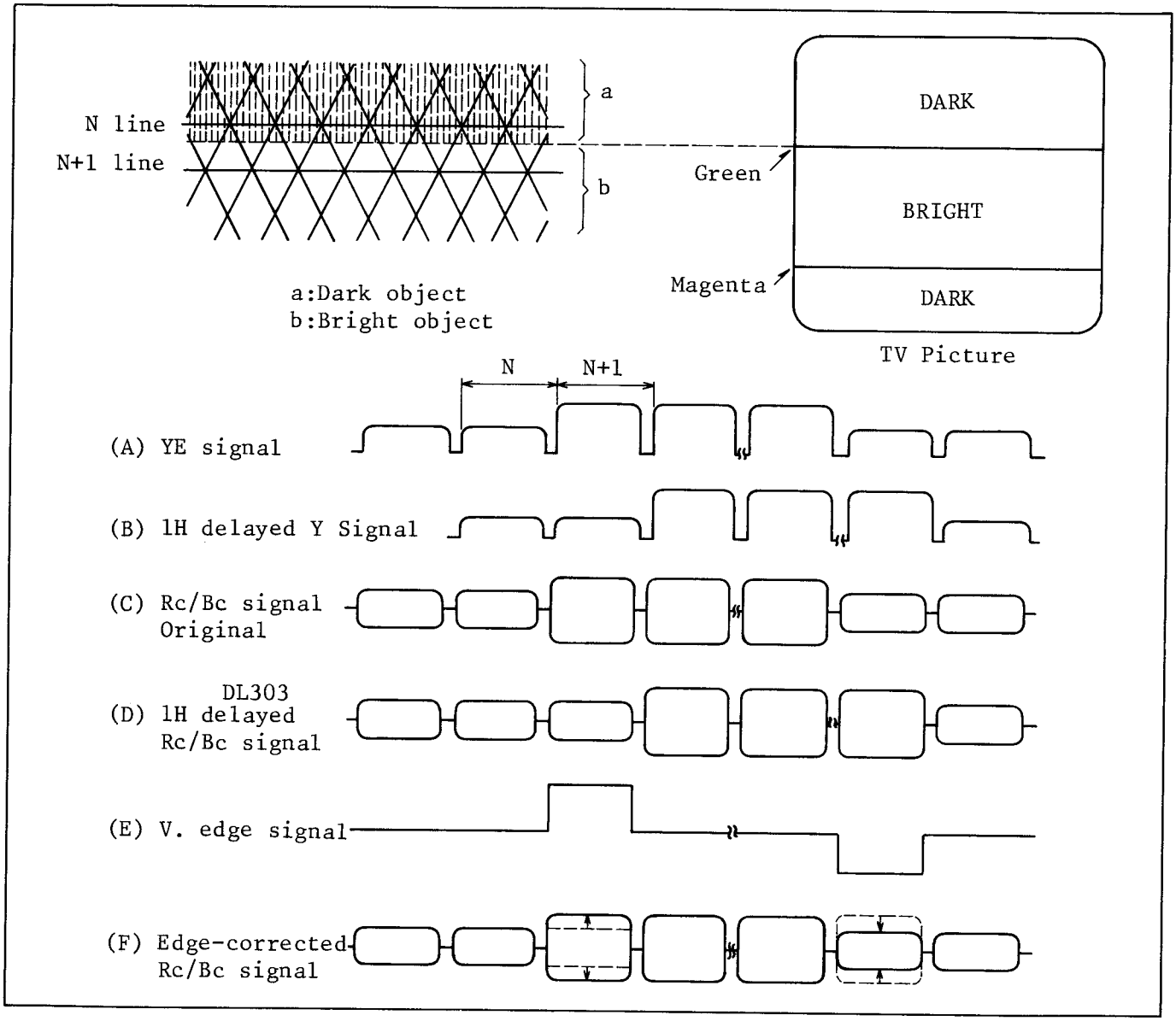


Fig. 12. Color Correction

## C. Color Shading Correction

Often the photo conductive layer on the surface of the special tube is uneven. It is necessary to electrically correct for this unevenness.

Suppose a uniformly illuminated white object is seen by the camera and the R color component signal has a shading (error) such as that shown in Fig. 13 (A). In this case, a shading correction signal (B) is generated by the shading correction circuit (which is set to the proper level during alignment). The R signal (A) is modulated by the shading correction signal (B), and a corrected R signal (C) is produced. This shading correction signal is mixed with the R signal (C) by a differential amplifier, and the R signal (D) is obtained. The color shading correction of the B signal is similar.

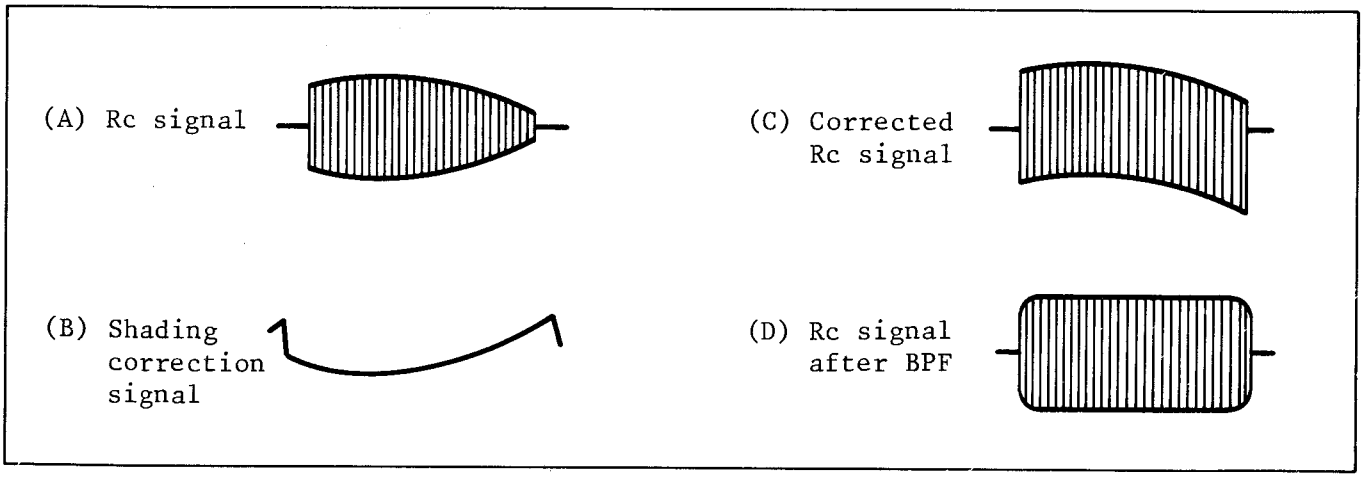


Fig. 13. Shading Correction

These correction waveforms are horizontal rate sawtooth and parabola waveforms. The two signal are formed from the horizontal deflection drive and injected in just the right amount to get an overall flat color waveform.

## D. De-gamma Correction Circuit

As described earlier, the special tube does not have linear photoelectric conversion characteristics. A typical special tube gamma characteristic is shown in Fig. 14 (A). Because of this inherent characteristic, the higher levels of the video signal will be compressed, see Fig. 14 (B).

Since the special tube in this color camera produces 4.3MHz modulated red (R) and blue (B) signals mixed with a green (G) signal (see Fig. 15 (A)), the higher levels of the modulated R and B signals obtained by separating the mixed signals are also compressed (B). The de-gamma correction signal circuit generates a de-gamma correction signal (D) to compensate for the compression of the higher levels of the R and B signals. This correction signal will be applied to both the Rc and Bc circuits as needed.

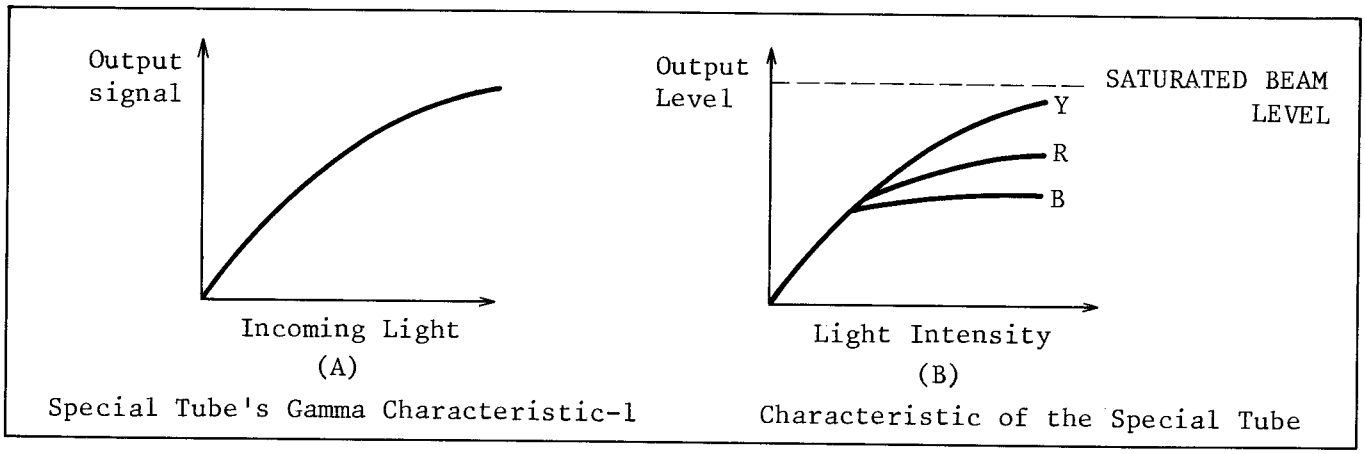


Fig. 14.

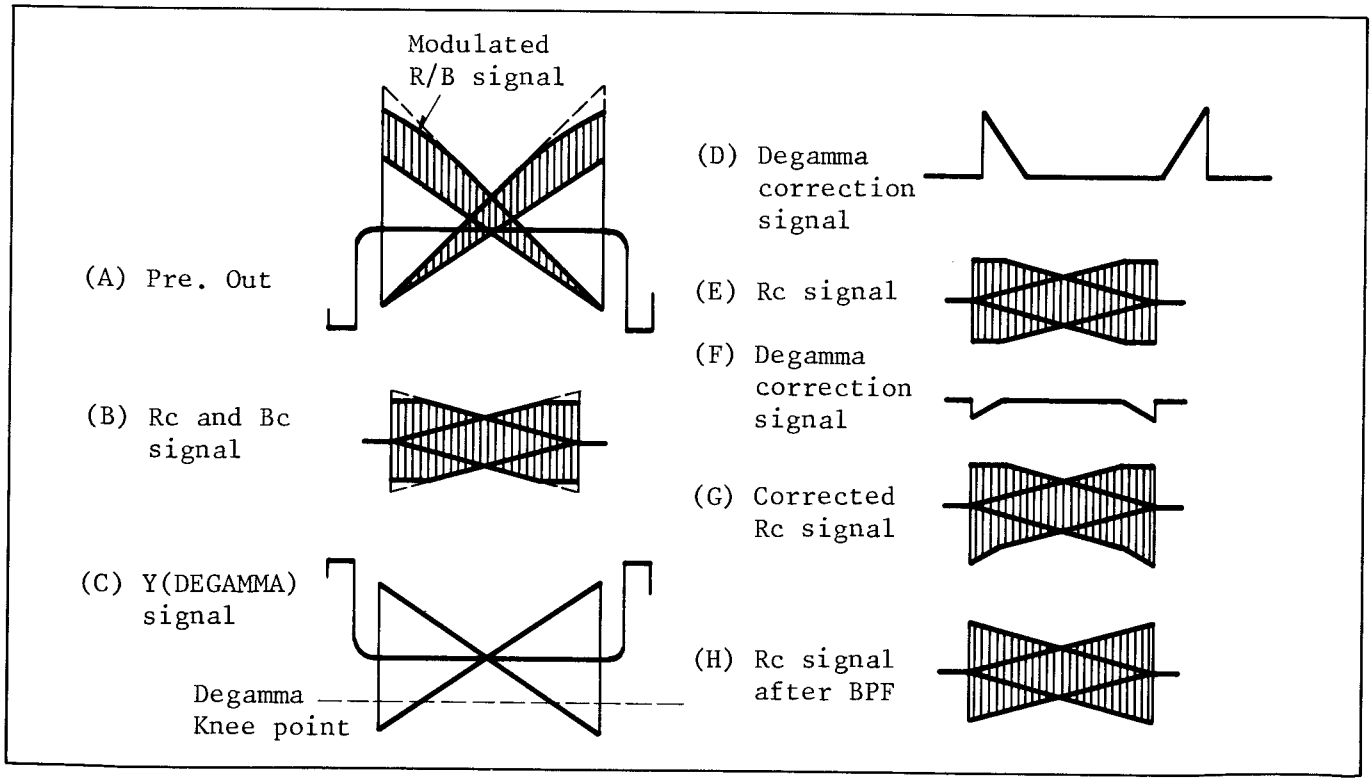


Fig. 15. Degamma Correction Signal

## E. Optical Black Clamp

A metallic stripe (optical black) (Fig. 16) is built into the special tube for cutting off the incoming light at the end of the horizontal scanning. When the beam scans the optical black portion, the dark current of the special tube is sampled and is clamped to a fixed DC potential, so that the black level variations due to a change in dark current can be tracked.

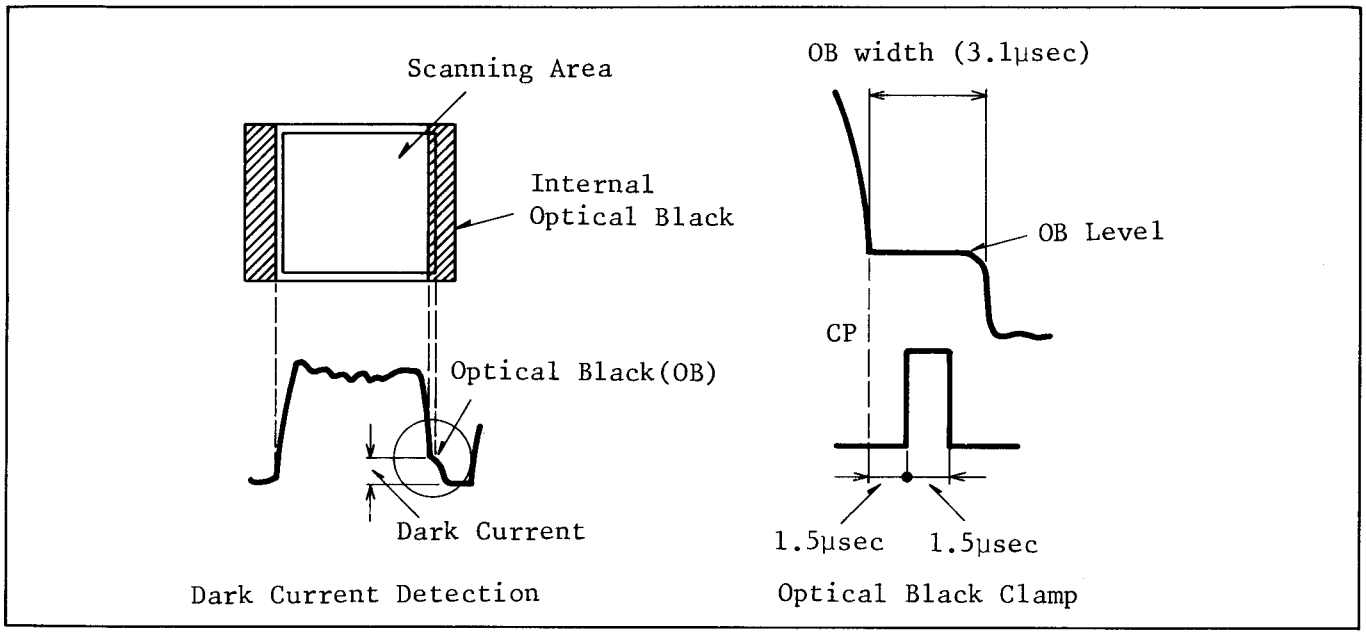


Fig. 16.

## F. High Luminance Chroma Clip Circuit

When the incoming light is extremely bright, the luminance level increases in direct proportion to the incoming light, therefore, the modulated chroma signal from the special tube is lowered in the inverse proportion to the incoming light until it finally disappears, resulting in a greenish picture on the TV screen and loss of white balance.

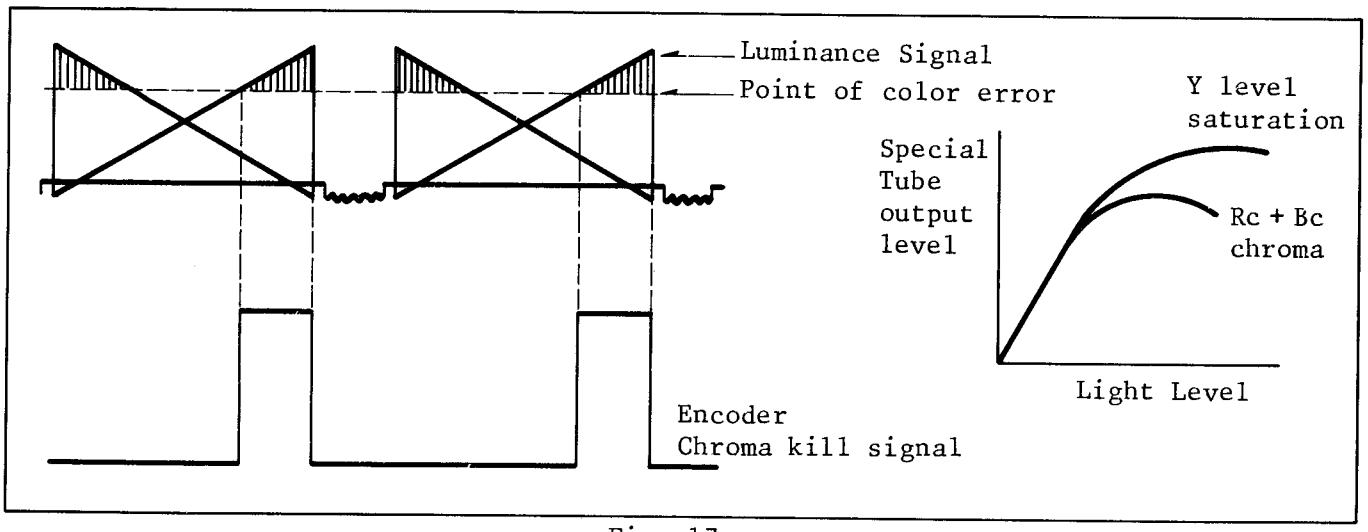


Fig. 17.

Therefore, a signal must be sent to the encoder to turn off the NTSC chroma modulators at peak whites. Since the chroma information in the NTSC signal is difference information, the lack of chroma makes the peak signal appear white, rather than miscolored (greenish picture).

## G. Horizontal Aperture Correction

The electronic beam has some thickness, so that when the electronic beam scans the special tube face or CRT, it causes some loss of resolution.

To enhance the horizontal resolution, a correction circuit generates a horizontal aperture correction signal.

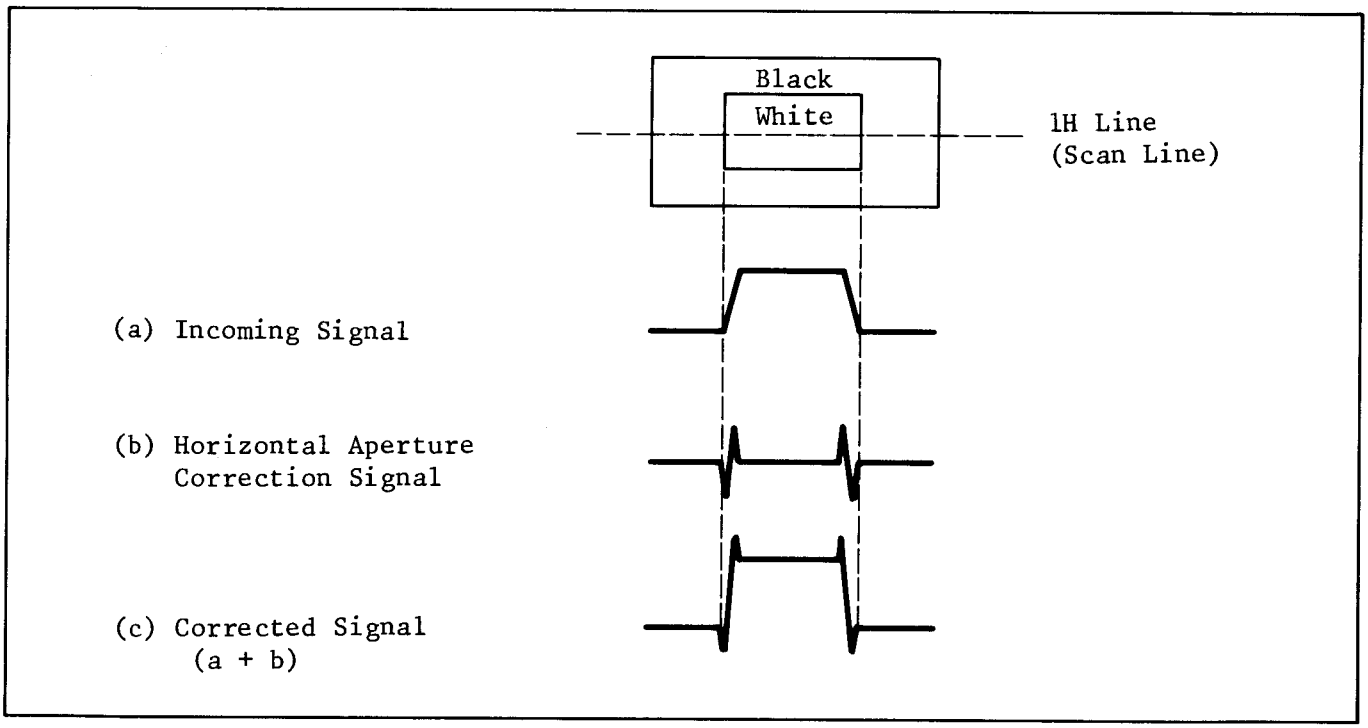


Fig. 18. Horizontal Aperture Correction

ORDER NO. VRD-8202-048

# Service Manual

Color Video Camera

# PK-802

**Vol. 2**

***Troubleshooting Guide***

***Adjustment Procedures***

## SPECIFICATIONS:

| | |
|---|---|
| Power Source: | DC 12V ± 10%<br>AC 120V ± 10%, 60Hz ± 0.5%<br>(with Power Supply Unit) |
| **Power Consumption:**<br>**(with E.V.F)** | DC 5.8W at 12V DC (Battery)<br>DC 1.2W at standby |
| **Special Tube System:** | 2/3″ frequency separation single tube system (built-in stripe filter) |
| Single Carrier Frequency: | 4.3MHz |
| Focus System: | Electro-static type |
| Lens Mounting: | Built-in zoom lens (not "C" mount) |
| Lens: | 6:1 zoom lens with auto/manual iris control.<br>Auto zoom lens and macro construction<br>F: 1.4, f: 12mm—72mm<br>d: 1.0m to infinity |
| Lens Diameter: | 49mm |
| Light Sensitivity: | Minimum light intensity on optical image: 40 Lux (F: 1.4)<br>Optimum light intensity on optical image: 900 Lux |
| Video Output Level: | 1.0Vp-p, 75Ω (M type coaxial connector)<br>(Standard NTSC signal) |
| Sync. System: | Internal Sync: RS-170 |
| Signal to Noise Ratio: | More than 45dB |
| Horizontal Resolution: | More than 270 lines |
| Color Temperature Control: | 2 step switch (indoor/outdoor) & auto adjust |
| Microphone: | Condenser Microphone |
| Audio Output Level: | −20dB, Hi-impedance |
| Audio Output Impedance: | High impedance (1KΩ) |
| External Microphone Input Impedance: | 600Ω unbalanced |
| Electronic Viewfinder: | Monochrome 1 inch CRT |
| Operating Temperature: | 5°C to 35°C |
| Operating Humidity: | 10% to 75% |
| Operating Position: | Normal position only |
| Weight: | **Camera Head with E.V.F.**<br>5.1 lbs (with lens, 7ft. cable & shoulder pad/handle grip)<br>AC adaptor (option)<br>2.4 lbs |
| Dimensions: | Camera Head with E.V.F.<br>8.3″(W) × 8.7″(H) × 11.2″(D)<br>208mm(W) × 218mm(H) × 282mm(D)<br>AC adaptor (option)<br>3″(W) × 3″(H) × 6″(D)<br>80mm(W) × 75mm(H) × 149mm(D) |

Weight and dimensions shown are approximate.
Specifications are subject to change without notice.

**Panasonic**®


Panasonic Company
Division of Matsushita Electric
Corporation of America
One Panasonic Way, Secaucus,
New Jersey 07094

Panasonic Hawaii Inc.
91-238 Kauhi St. Ewa Beach
P.O. Box 774
Honolulu, Hawaii 96808-0774

Panasonic Canada
Division of Matsushita Electric
of Canada Limited
5770 Ambler Drive, Mississauga,
Ontario, L4W 2T3

Panasonic Sales Company,
Division of Matsushita Electric
of Puerto Rico, Inc.
Ave, 65 De Infanteria, KM 9.7
Victoria Industrial Park
Carolina, Puerto Rico 00630

PRODUCT COMPLIES WITH DHEW RULES 21CFR SUBCHARTER J APPLICABLE AT DATE OF MANUFACTURE

# SAFETY RECAUTION

## GENERAL GUIDELINES

1. When service is required, observe the original lead dress. Components, wires or cables that indicate evidence of overheating or other electrical or mechanical damage should be replaced.
2. After servicing the camera, power supply and electronic viewfinder, all the protective devices, such as insulation tape, shields and isolation R-C combinations must be properly installed.
3. Potentials as high as 5KV are present when the electronic viewfinder is operating. Operation without the camera head side covers, finder case ass'ys of electronic viewfinder and covers of power supply unit presents a danger of shock hazard from the camera power supply. Servicing should not be attempted by anyone who is not thoroughly familiar with the precautions that should be taken when working on high-voltage equipment. Always discharge the anode of the picture tube to the main chassis before handling the tube.
4. After servicing , make the following leakage current checks to prevent the customer from being exposed to shock hazards.

## LEAKAGE CURRENT COLD CHECK

Conduct this test on the power supply unit with the camera disconnected and repeat with the camera, power supply unit and electronic viewfinder properly assembled. Also, repeat test with and without available approved accessories/cables/connectors.

1. Turn the AC switch on.
2. Measure the resistance value, with an ohmmeter, between the jumpered AC plug and each exposed terminal, screwheads and coaxial connectror. The resistance measured should not be less than ∞ (infinity). Any resistance value below this range indicates an abnormality which requires corrective action.
3. Repeat the test with the AC switch in the "off" position.

## LEAKAGE CURRENT HOT CHECK

Conduct this test on the power supply unit with the camera disconnected and repeat with the camera, power supply unit and electronic viewfinder properly assembled. Also, repeat test with and without available approved accessories/cables/connectors.

1. Plug the AC cord directly into the AC outlet. Do not use an isolation transformer for this check.
2. Connect a 1.5KΩ 10 watt resistor, paralleled by 0.15μF capacitor, between each exposed metallic part on the unit and a good earth ground such as a water pipe, as shown in figure 1.
3. Use an AC voltmeter, with 1000Ω/volt or more sensitivity, to measure the potential across the resistor.
4. Check all exposed metallic parts of the cover (Cable connection, Handle bracket, metallic cabinet, Screwheads, Metallic overlays, etc), and measure the voltage at each point.
5. Reverse the AC plug in the AC outlet and repeat each of the above measurements.
6. The potential at any point should not exceed 0.75 V RMS. A leakage current tester (FLUKE MODEL: 8000A equivalent) may be used to make the hot checks. Leakage current must not exceed 0.5 milliamp. In case a measurement is out side of the limits specified, there is a possibility of a shock hazard, and corrective action must be taken before returning the instrument to the customer.

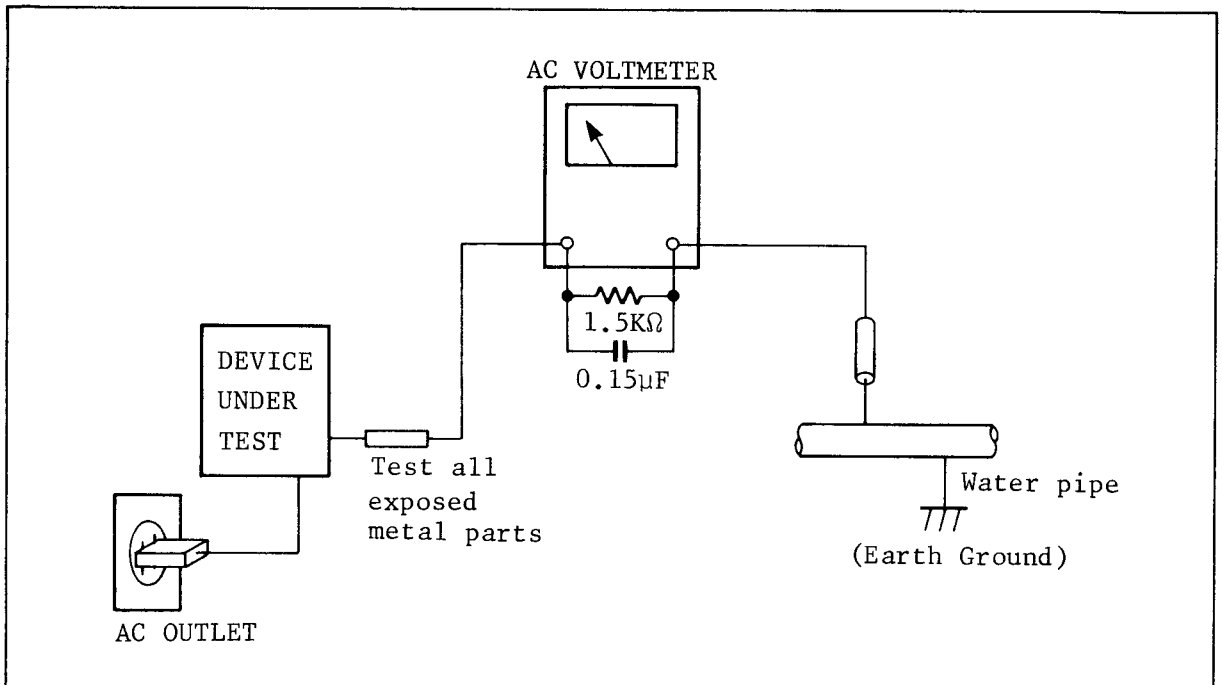


Figure 1. Leakage Current Hot Check

## X - RADIATION

1. The potential source of x-radiation in electronic viewfinder is the high - voltage section and picture tube.
2. It is important to use a periodically checked and accurate high - voltage meter, to monitor and check the high voltage.
   Rotate the brightness control and contrast fully counterclockwise for this test.
3. Observe that the high voltage does not exceed the specified value.
   Excessive high voltage may cause a possible x-radiation hazard.
   The camera system should be repaired as soon as possible.
4. It is essential to use the specified picture tube to avoid a possible x-radiation hazard.

# CONTENTS

SERVICE & SIGNAL FLOW CHART ..... 2-3

LUMINANCE SECTION

No Picture ..... 2-3

No Picture (Defective Iris Circuit) ..... 2-4

No Picture (Defective Negative/Positive Reverse Circuit) ..... 2-5

CHROMINANCE SECTION

No Color ..... 2-6

No Color (Defective Burst Circuit) ..... 2-7

No Red and Blue ..... 2-8

No Green ..... 2-9

TROUBLE SHOOTING CHART

5V/7V Power Source ..... 2-10

Micro-Computer ..... 2-12

ADJUSTMENT PROCEDURES ..... 2-19

Disassembly Method ..... 2-19

(1) +9V Adjustment ..... 2-29

(2) Deflection Circuit Adjustment ..... 2-30

(3) Process Circuit Adjustment ..... 2-46

(4) Electronic Viewfinder Circuit Adjustment ..... 2-55

LOCATION OF TEST POINTS AND CONTROLS ..... 2-55

COLOR CAMERA SERVICING FIXTURES ..... 2-56

# LUMINANCE SECTION

## SERVICE FLOW CHART

## NO PICTURE

If there is no picture, Test Point TP301 is the suggested place to start checking.

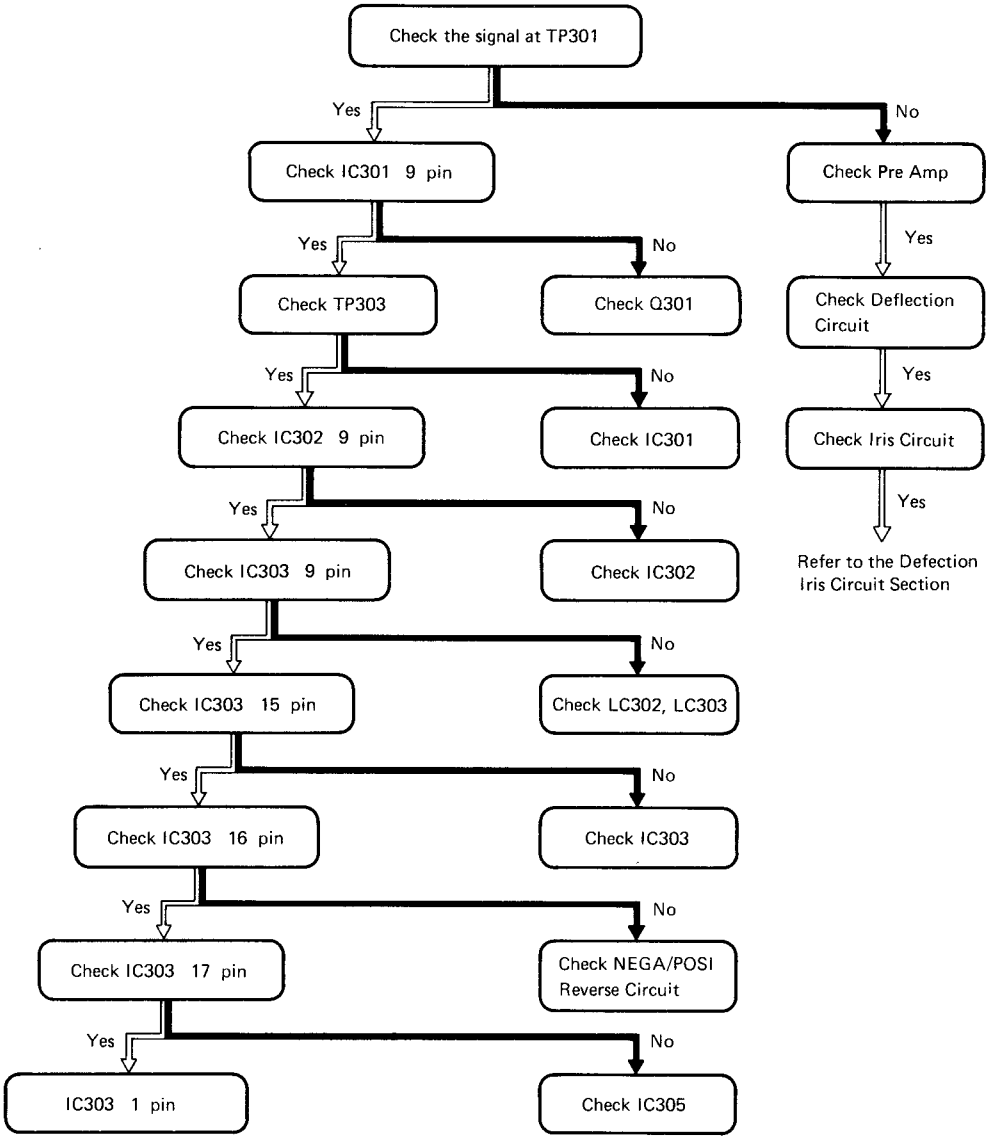


## SIGNAL FLOW CHART

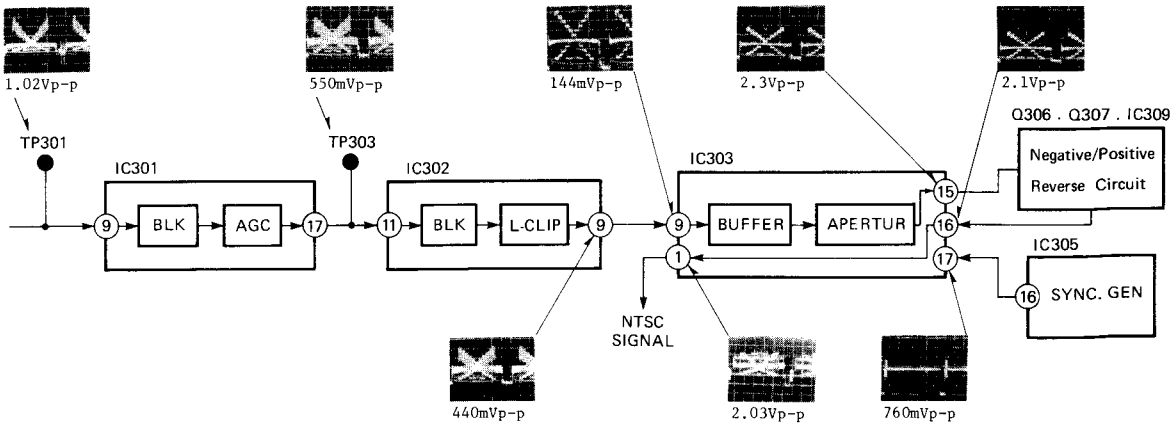

# LUMINANCE SECTION

## SERVICE FLOW CHART

## NO PICTURE

(Defective Iris Circuit)

·When checking the iris circuit, be sure to place the Auto/Manual iris selector switch to the "MANUAL" position and open the iris fully.

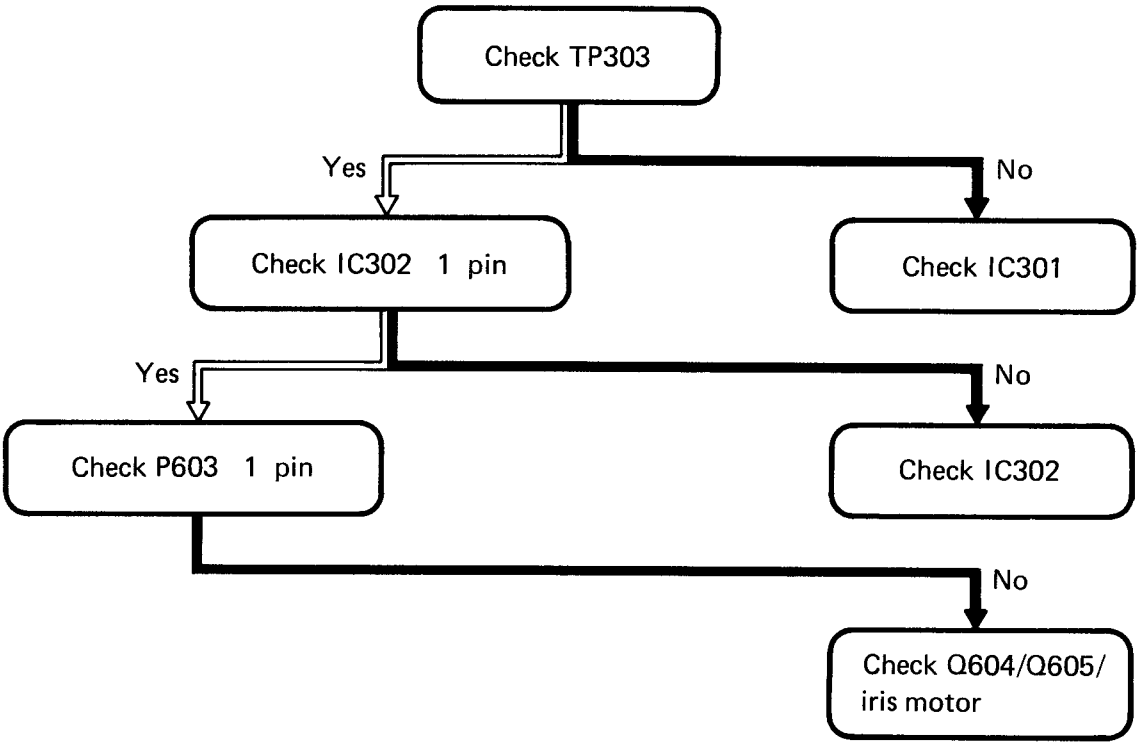


## SIGNAL FLOW CHART

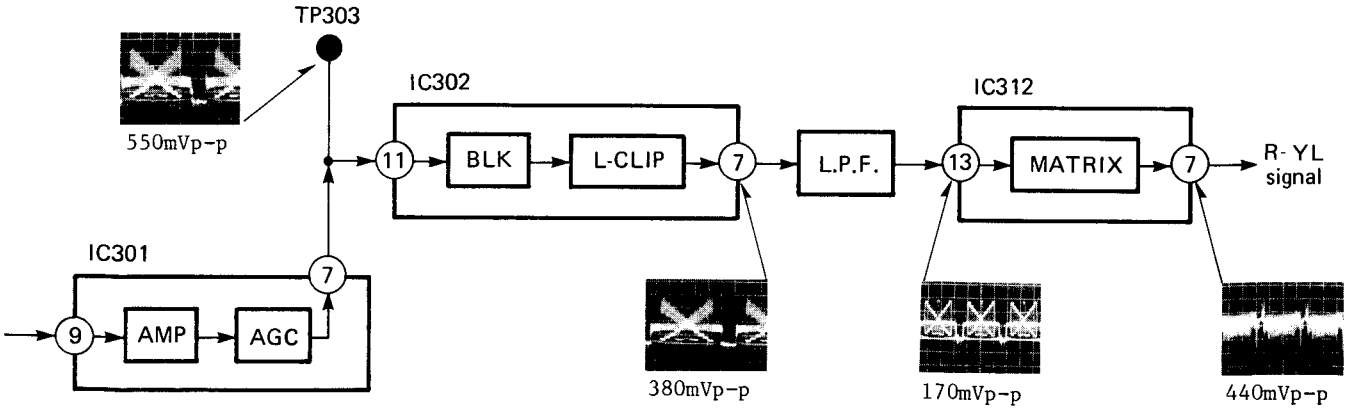

# LUMINANCE SECTION

## SERVICE FLOW CHART

## NO PICTURE

(Defective Negative/Positive Reverse Circuit)
If there is no reverse picture, IC309 is the suggested place to start the checking.

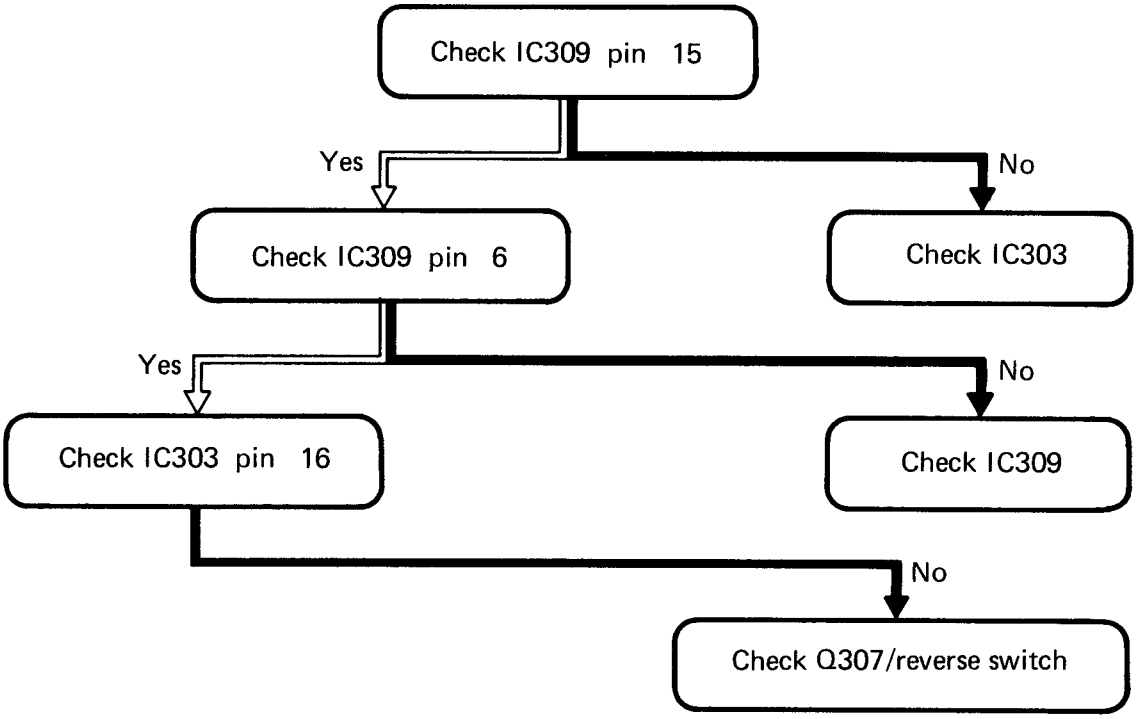


## SIGNAL FLOW CHART

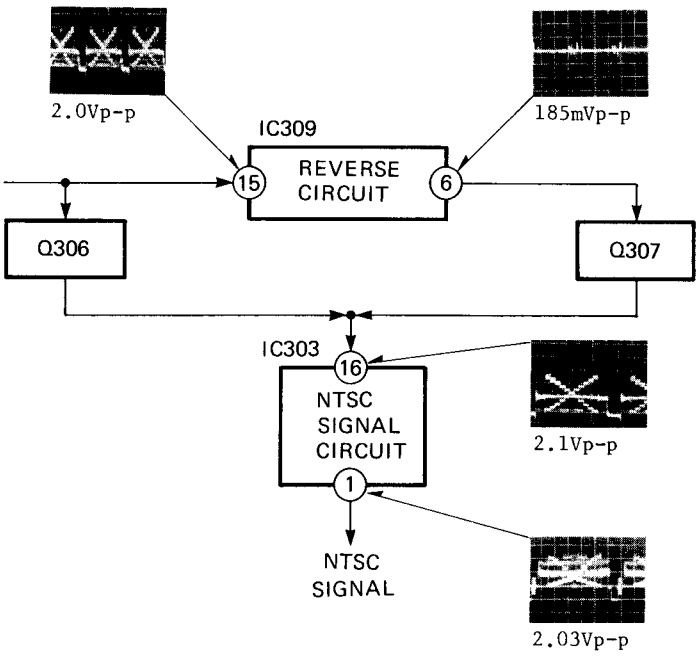

# CHROMINANCE SECTION

## SERVICE FLOW CHART

## NO COLOR

If there is no color, pin 2 of IC307 is the suggested place to start checking.

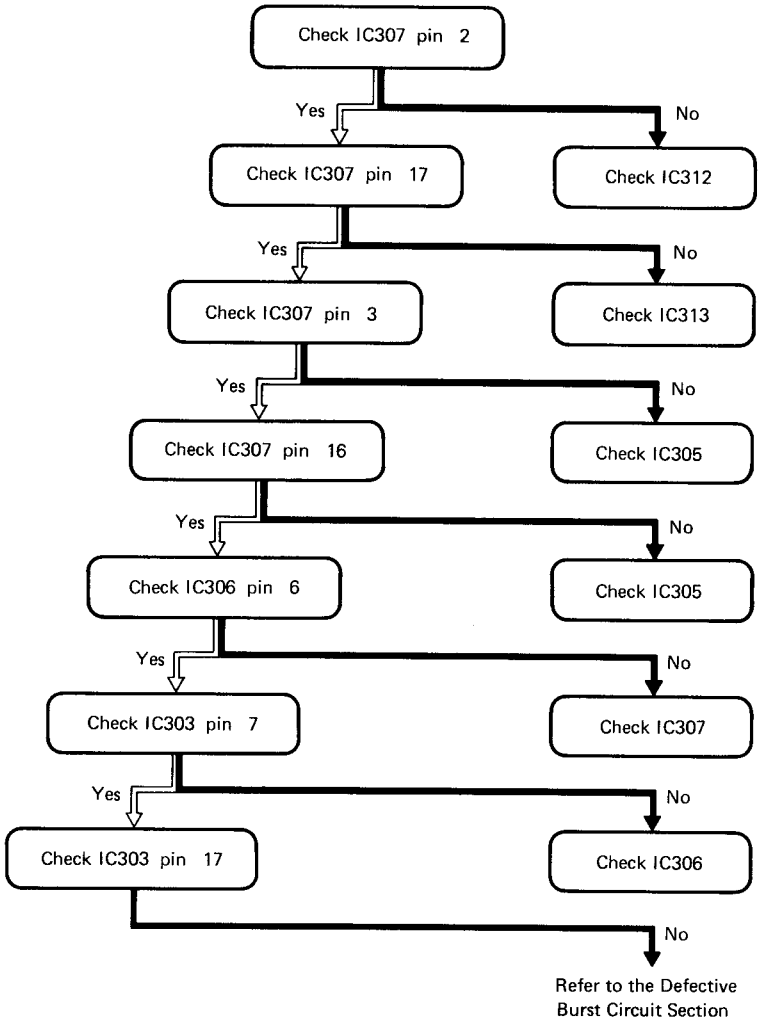


## SIGNAL FLOW CHART

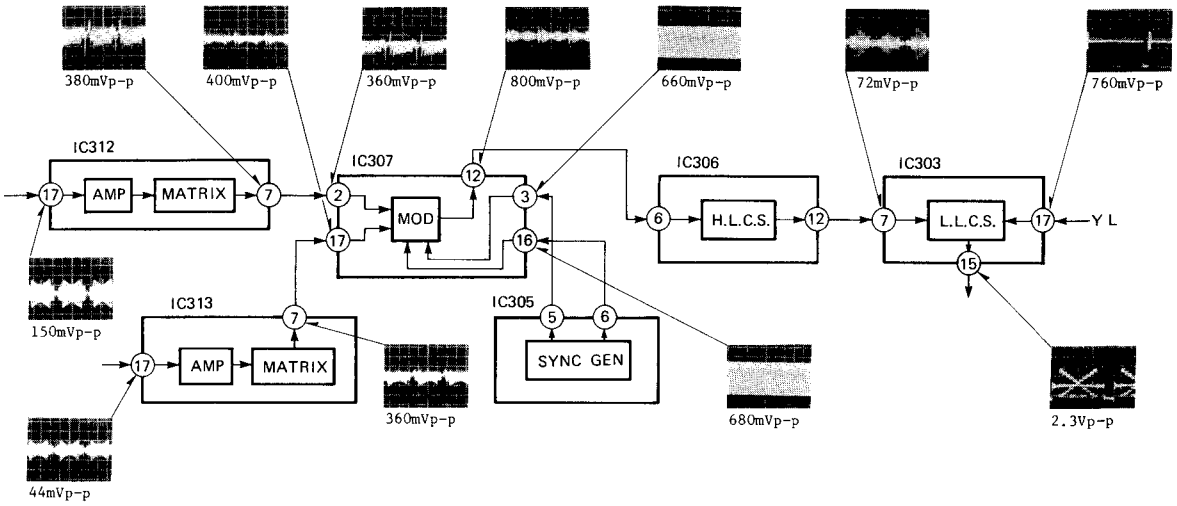

# CHROMINANCE SECTION

## SERVICE FLOW CHART

## NO COLOR

(Defective Burst Circuit)

If there is no burst, IC305 is the suggested place to start the checking.

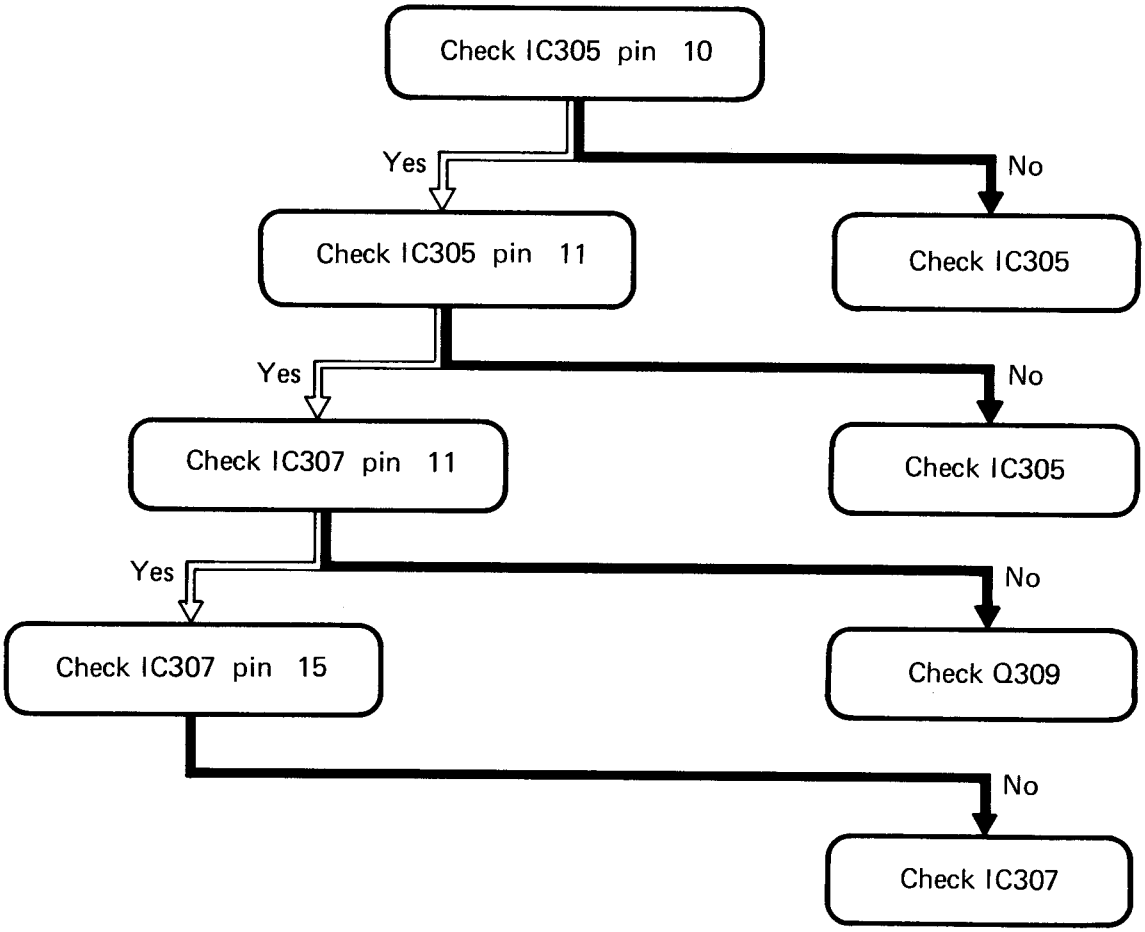


## SIGNAL FLOW CHART

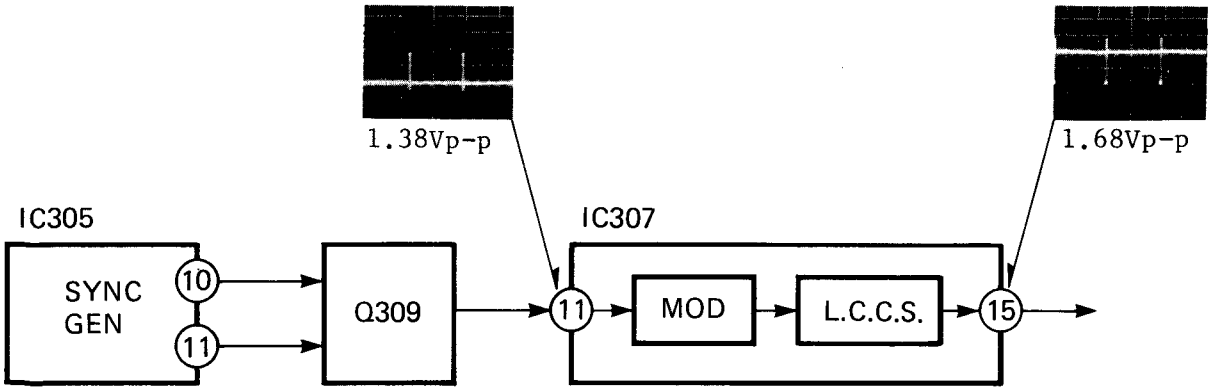

# CHROMINANCE SECTION

## SERVICE FLOW CHART

## NO RED AND BLUE

If there is no red and blue, IC301 is the suggested place to start the checking.

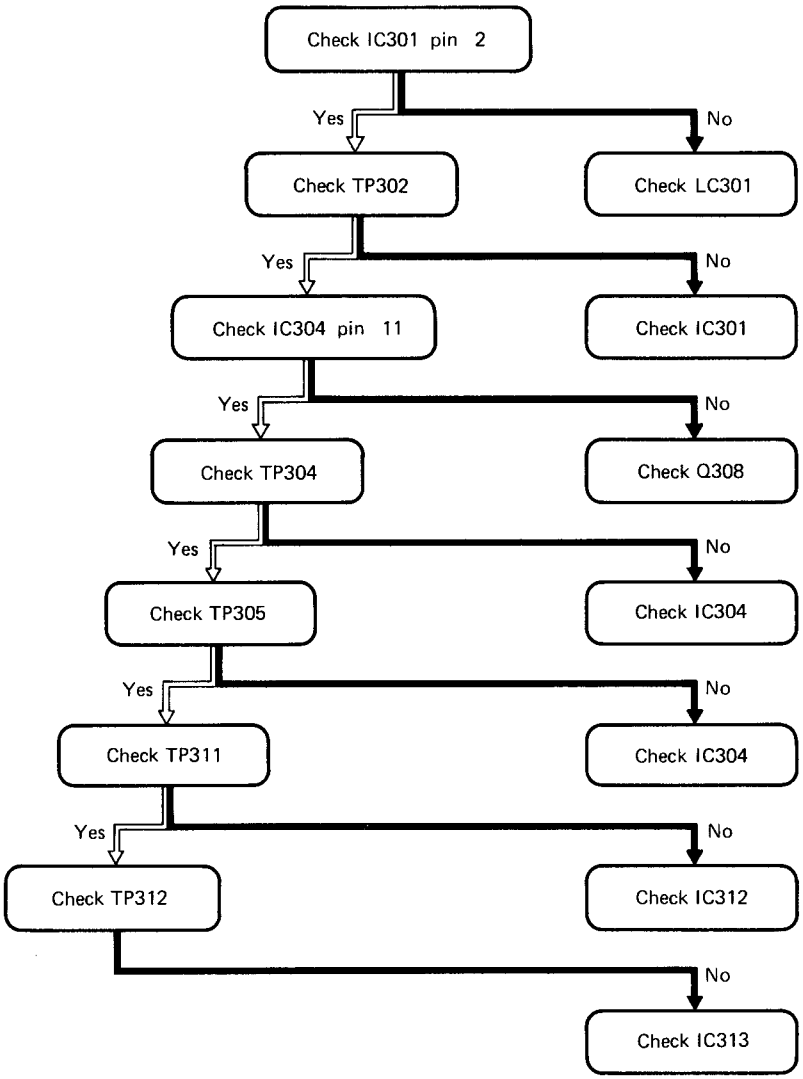


## SIGNAL FLOW CHART

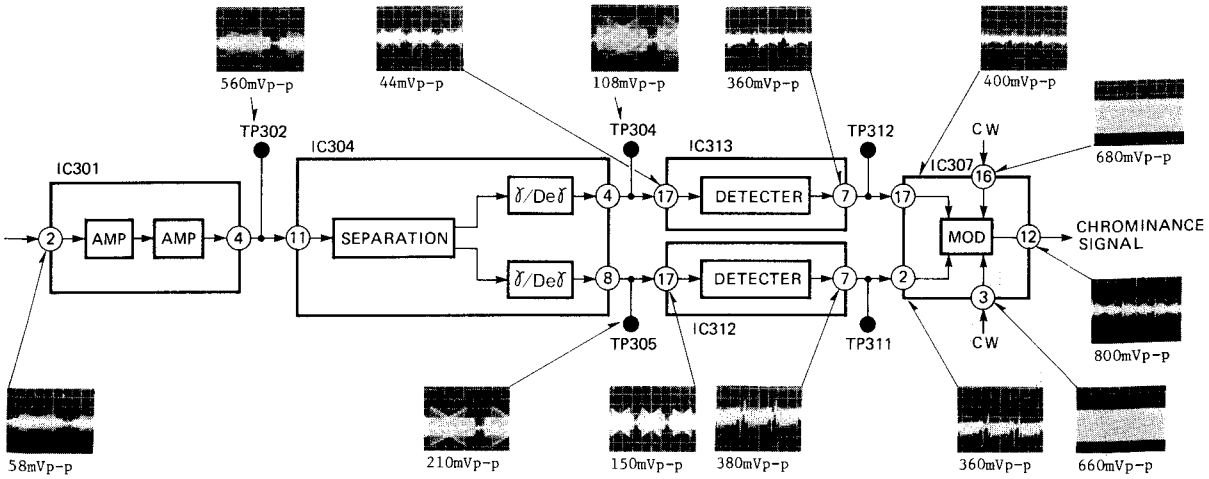

# CHROMINANCE SECTION

## SERVICE FLOW CHART

## NO GREEN

If there is no green, TP303 is
the suggested place to start the checking.

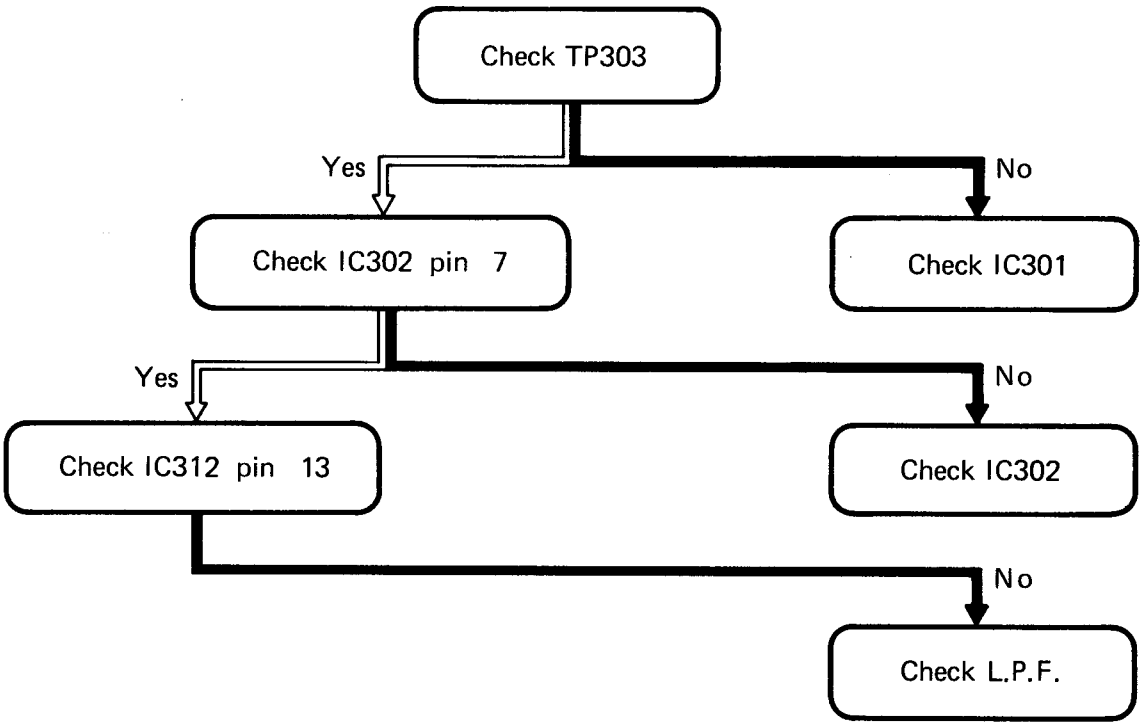


## SIGNAL FLOW CHART

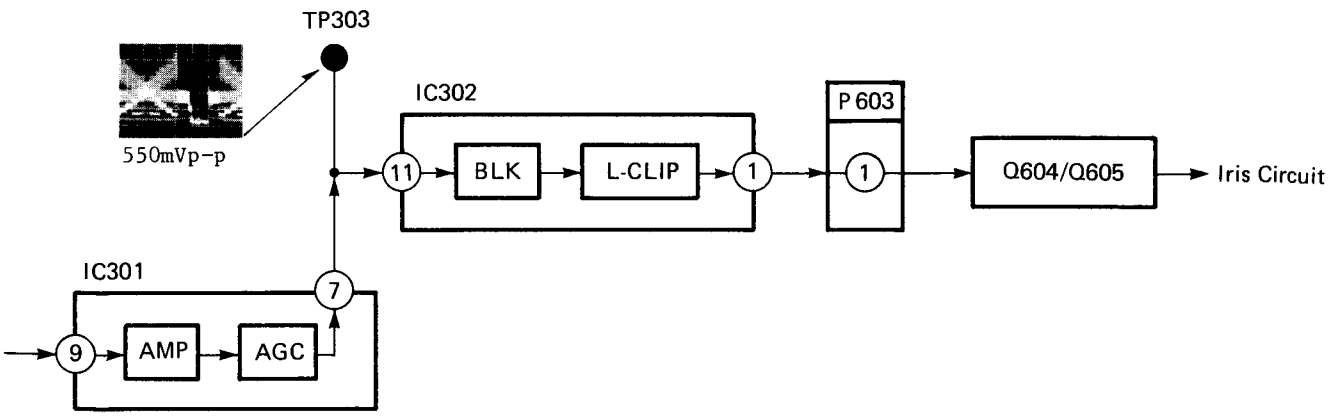

## Trouble Shooting Chart For The 5V/7V Power Source

Note: This trouble shooting procedure can only be followed when the camera is connected with a PV-5000 series portable VCR.

(1) 5V is not sent out from TP614.

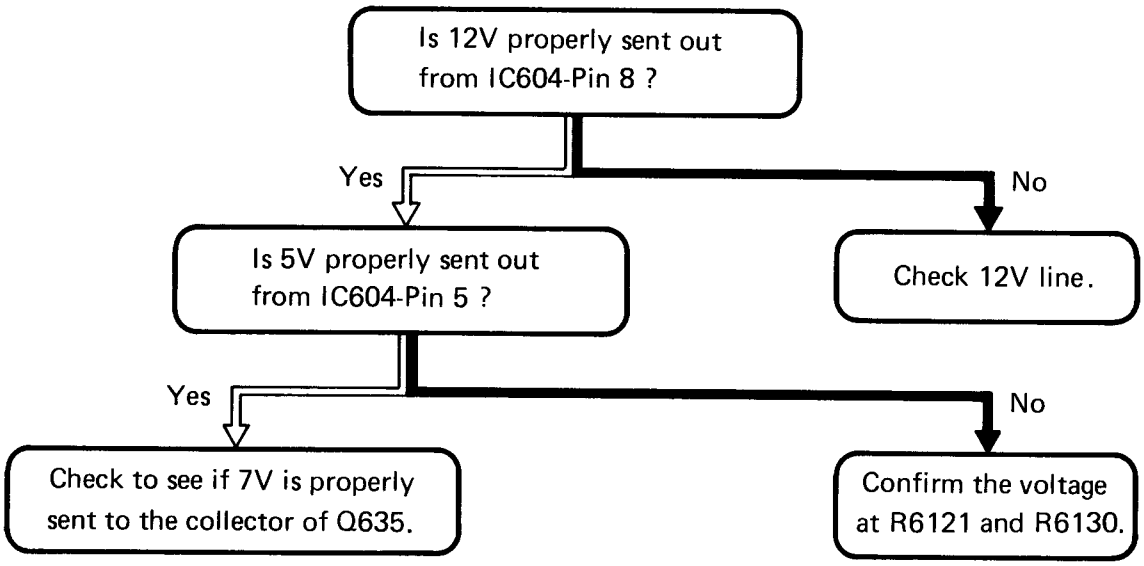


(2) The 5V power source for the micro-computer.

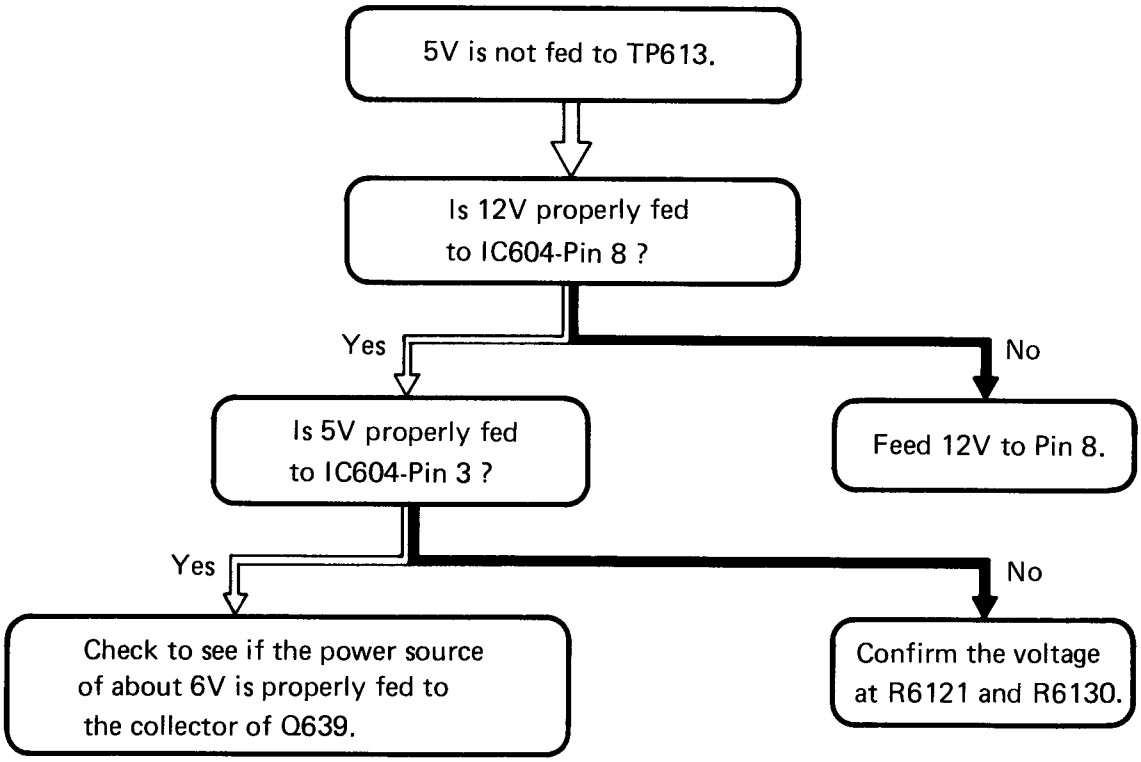

(3) The 5V power source for the micro-computer and AWC circuit when the Stand-by mode is activated.

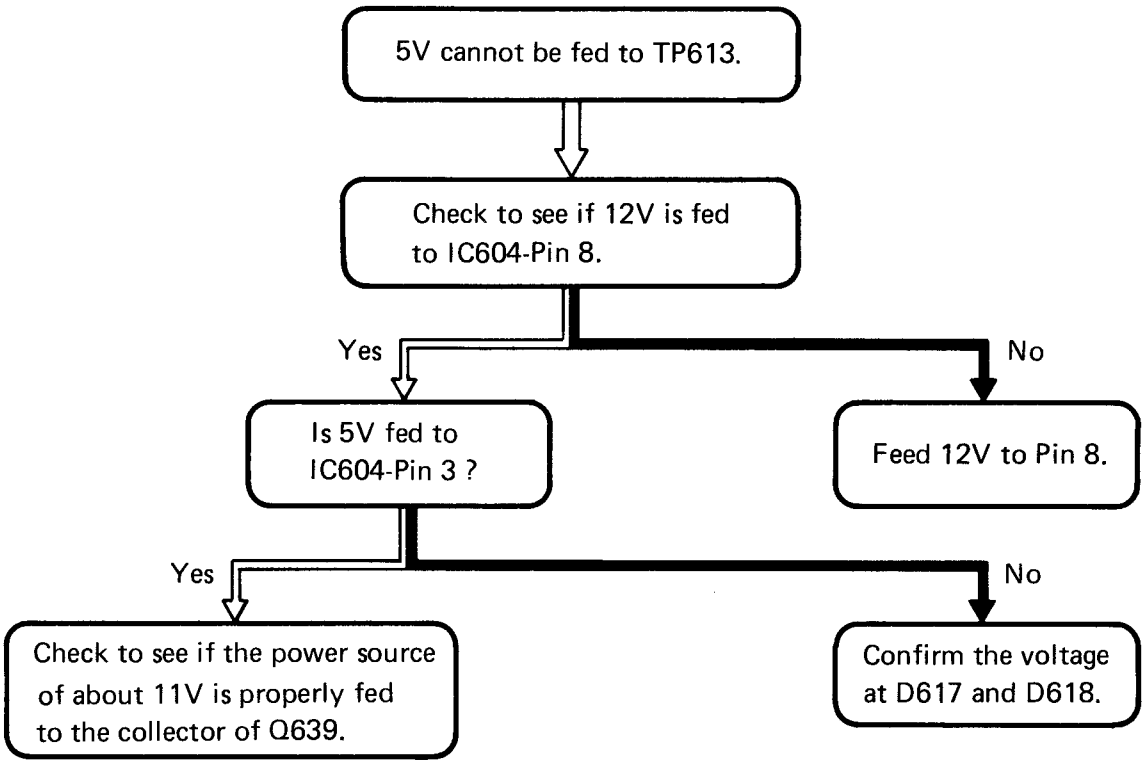


(4) The 7V power source cannot be sent out.

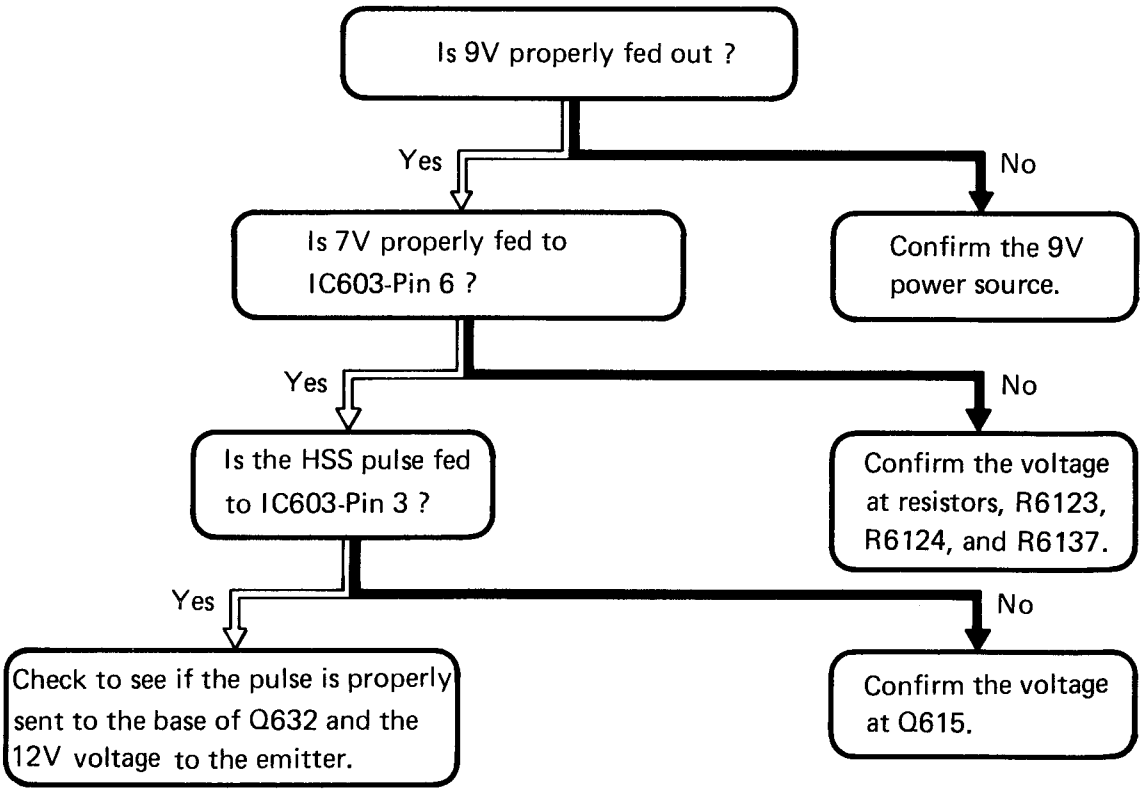

## Trouble Shooting Chart For The Micro-Computer

(1) After the power is ON, when the display mode is set either to "TITLE" or to "L.T." and the stand-by switch to OP-1, no display appears at all.

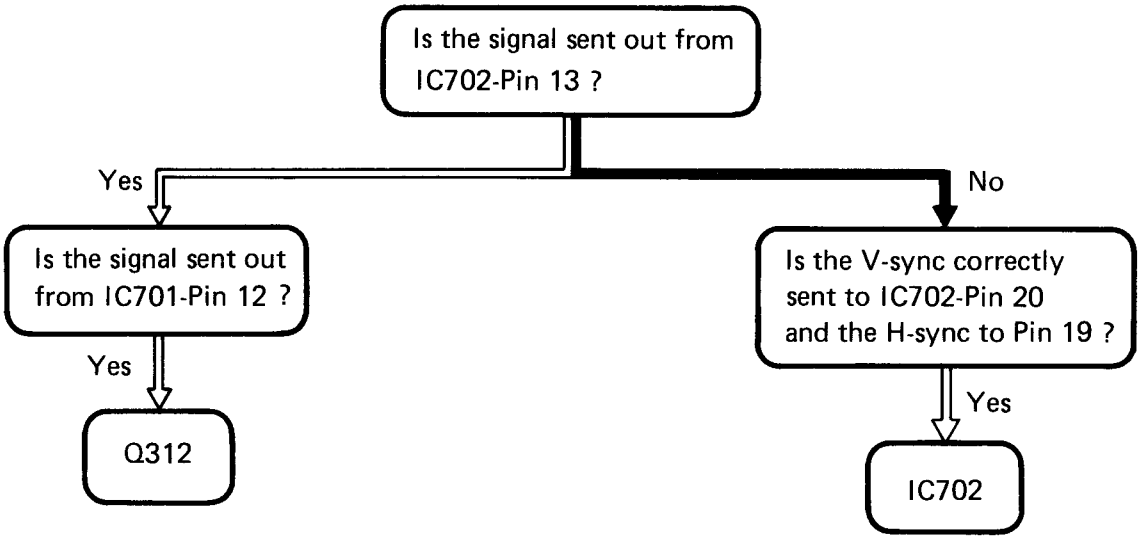


(2) When the power of the portable VCR is turned on and the camera connected with the camera remote sw in the ON position, wait for 3 seconds but the tape can not be loaded.

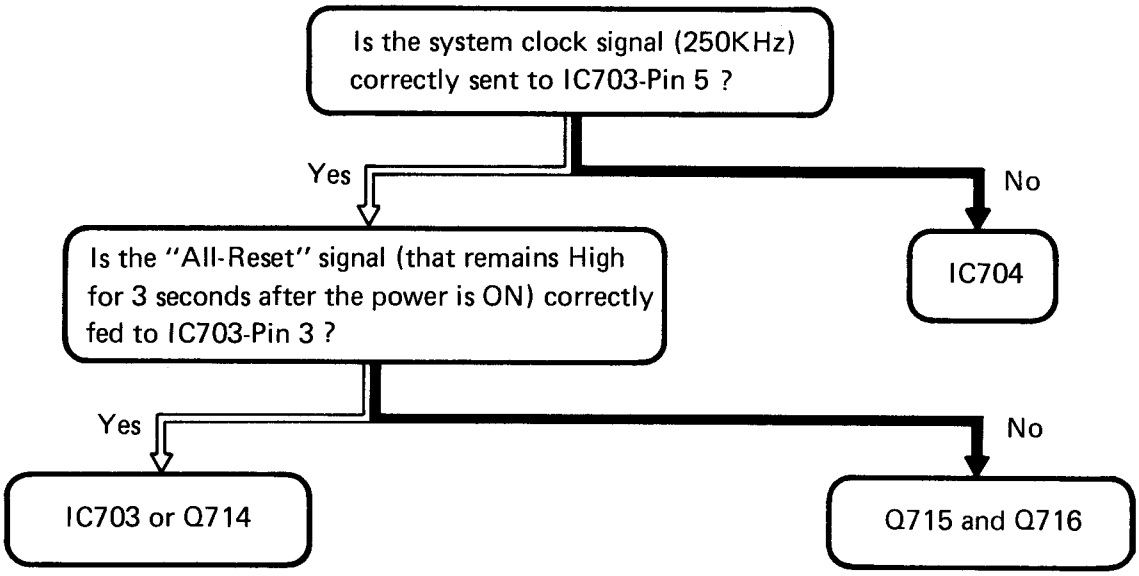

(3) Stop watch does not start counting.

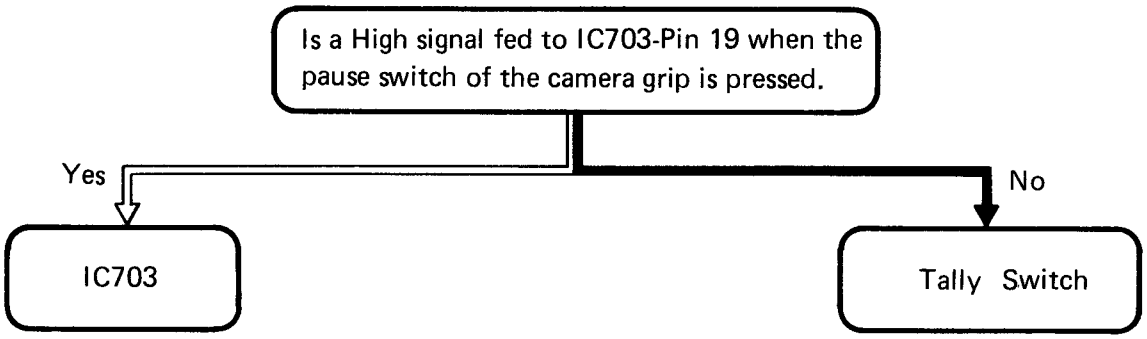


(4) When the VCR and camera are connected, the camera pause switch cannot activate the camera recording and the VCR playback, remaining in Pause.

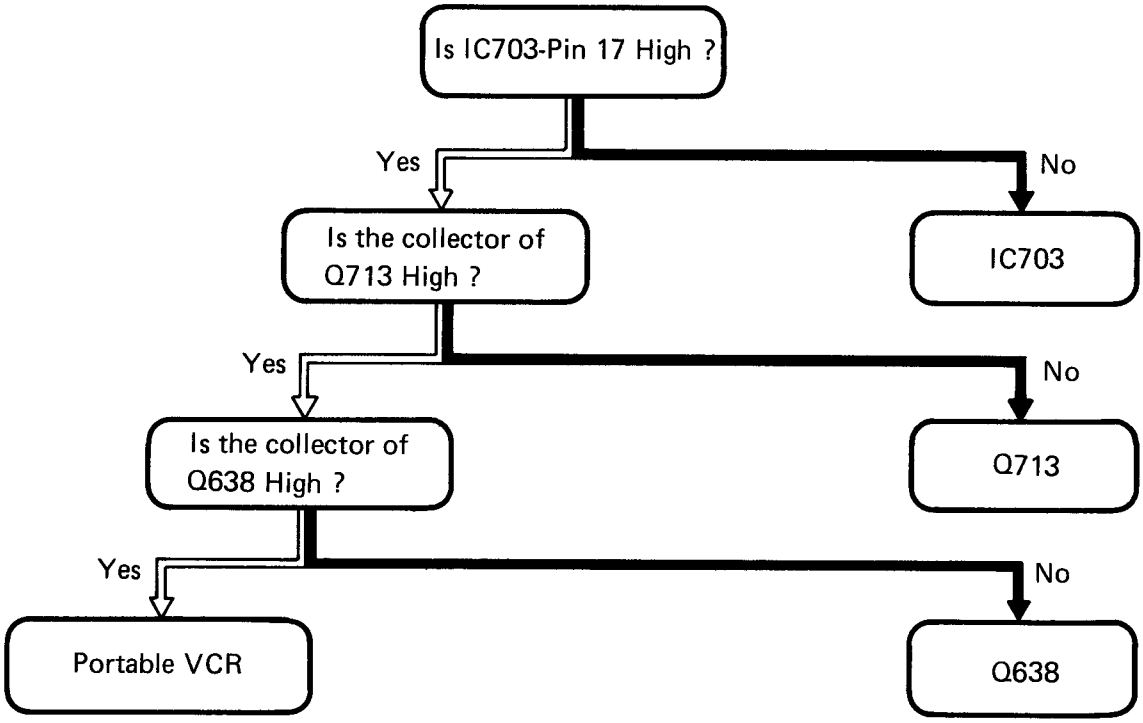

(5) When the Fade switch is ON, Fade cannot be activated.

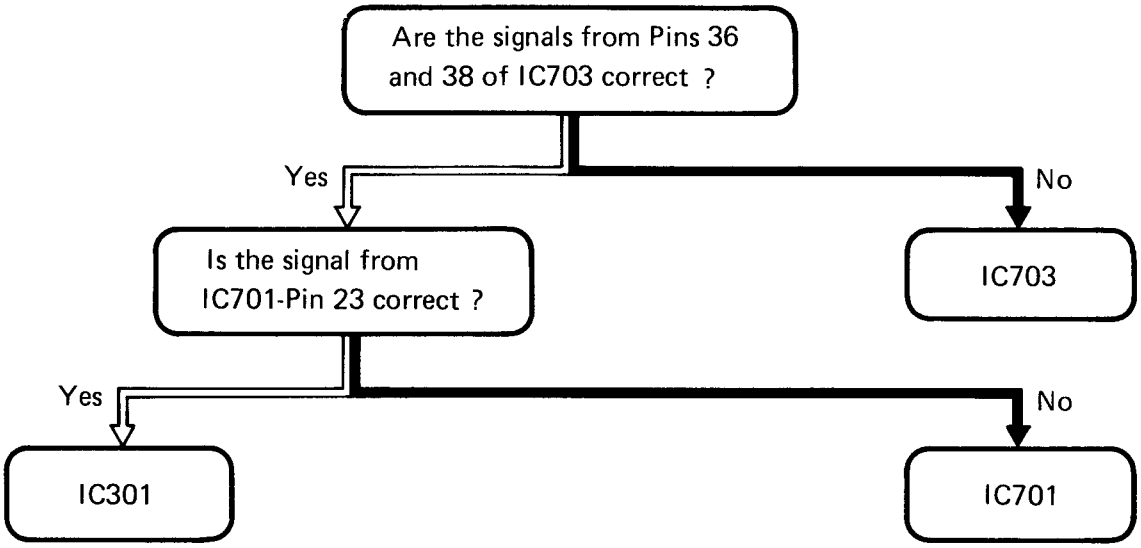


(6) When the Fade switch is ON, white bar does not appear on the EVF (Electronic View Finder).

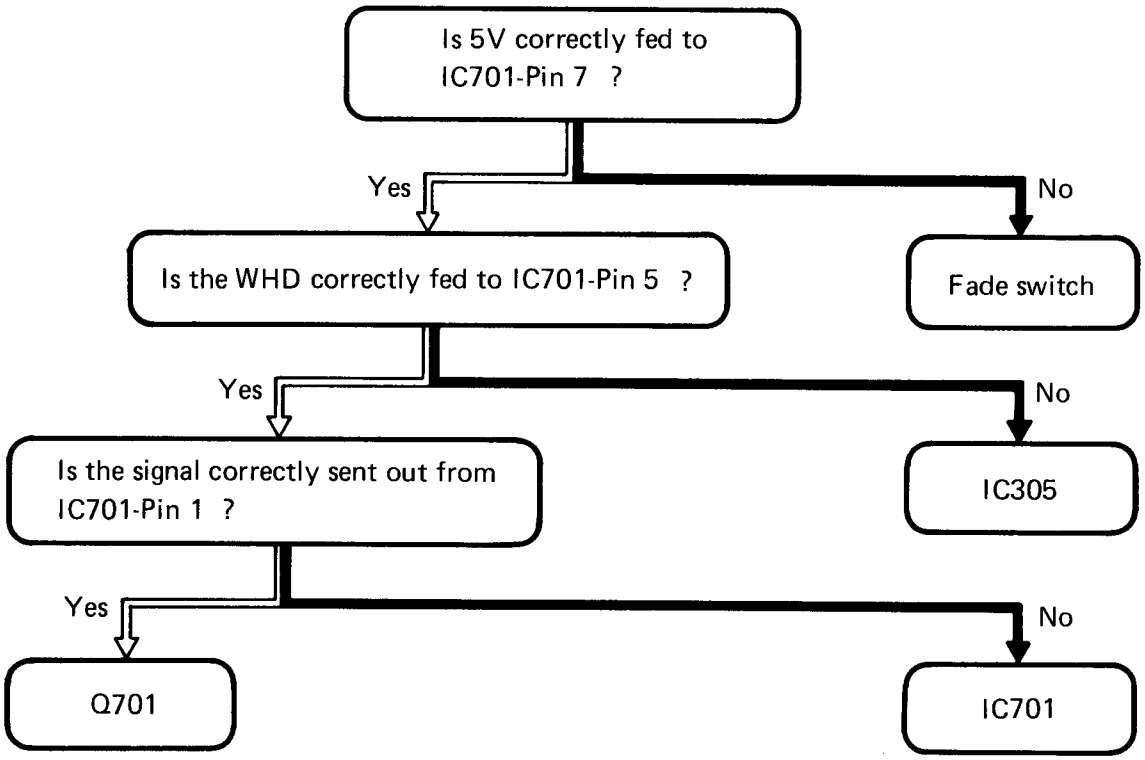

(7) When the Stand-by switch is turned to "OP1" (Display ON) from "OP2" (Display OFF), reset is not activated.

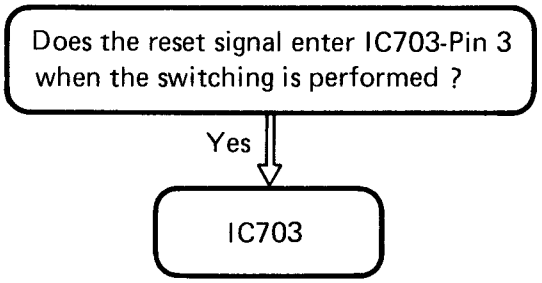


(8) Switching between the camera and the VCR cannot be activated at all.

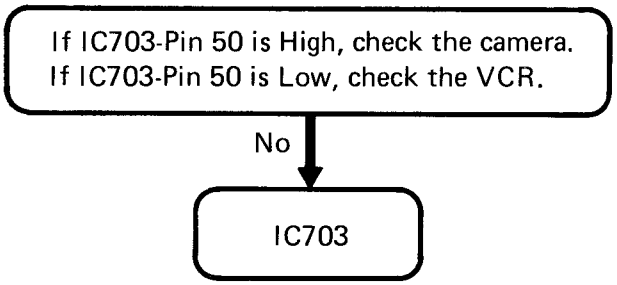


(9) "VCR INF" cannot be displayed.

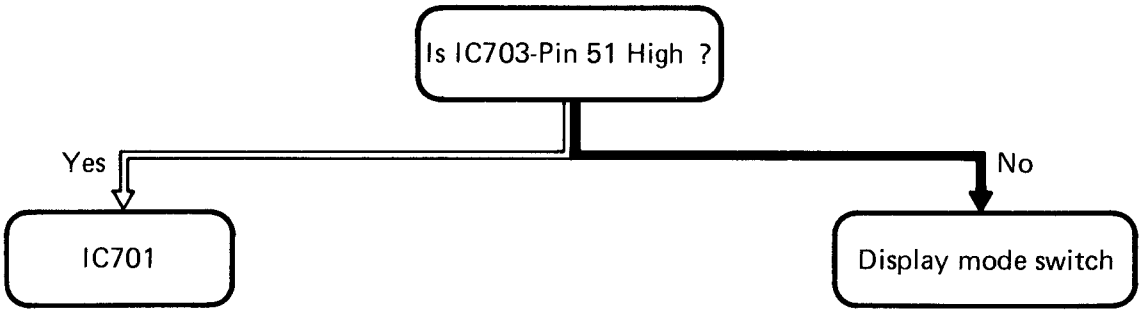

(10) "L.T." cannot be displayed.

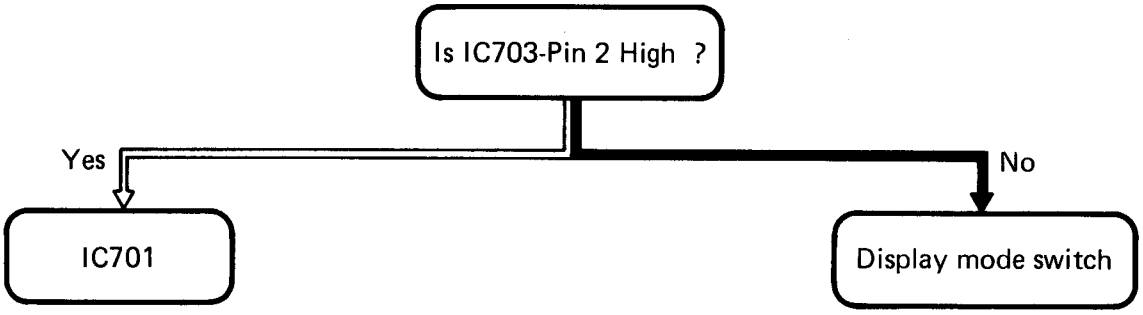


(11) "VCR INF" cannot be displayed on the EVF.

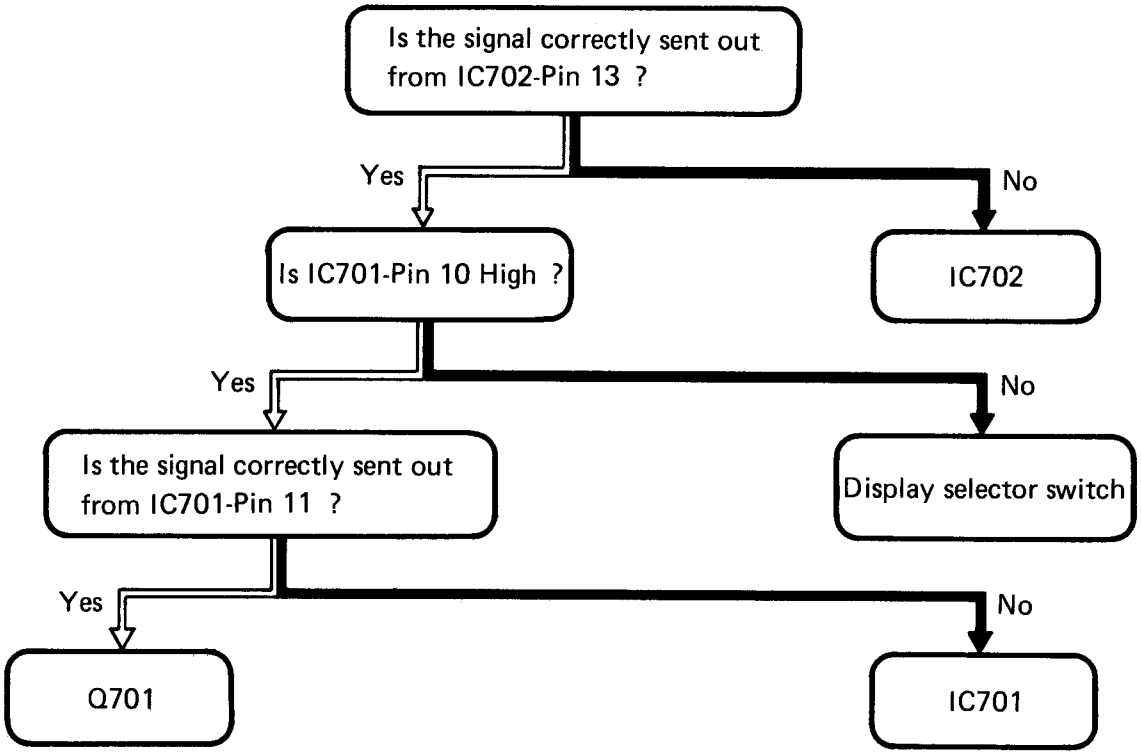

(12) When the "Display" mode is activated, the letter display such as Lapse Time and Title cannot be erased.

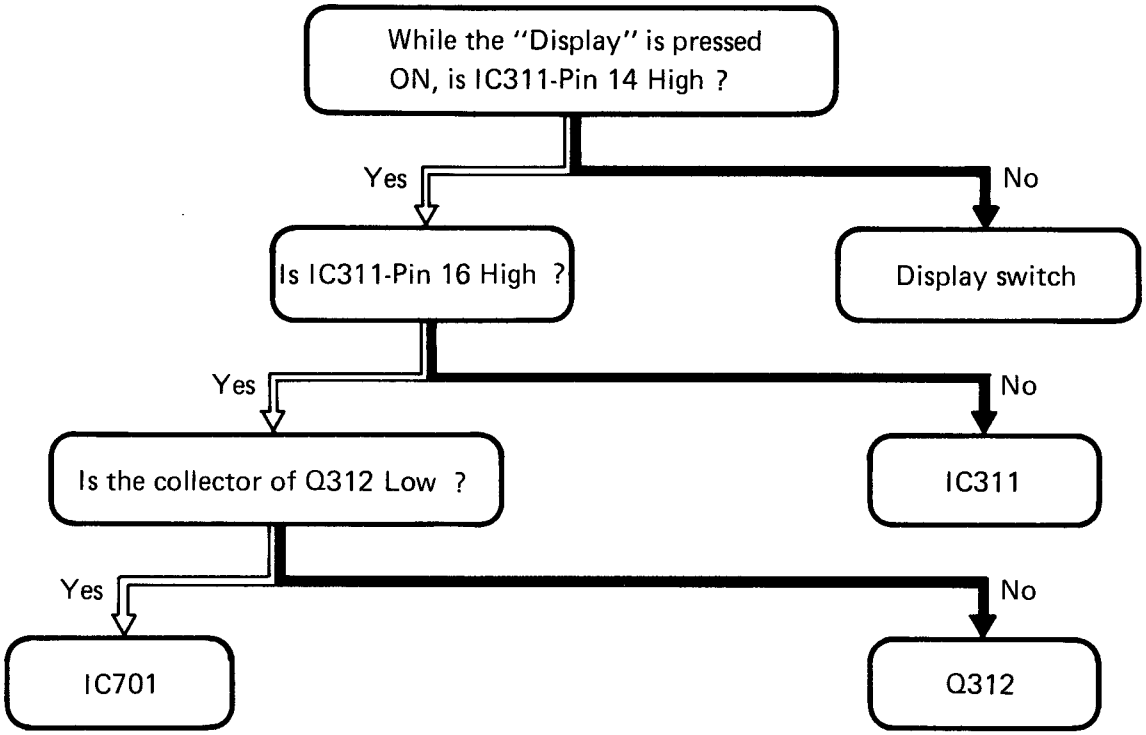


(13) When the camera recording is activated with the VCR connected, both the flash tally LED in the EVF and the Rec LED in front of the CRT (Cathode-Ray Tube) cannot be activated.

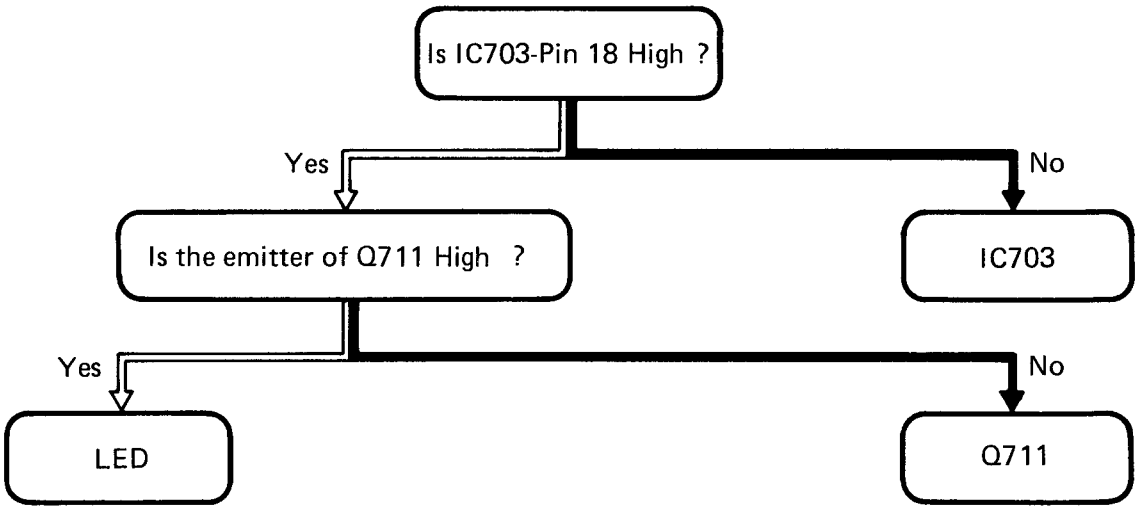

(14) Key operation for any of the "Play/Pause", "Slow", "Cue", and "Review" modes cannot be activated.

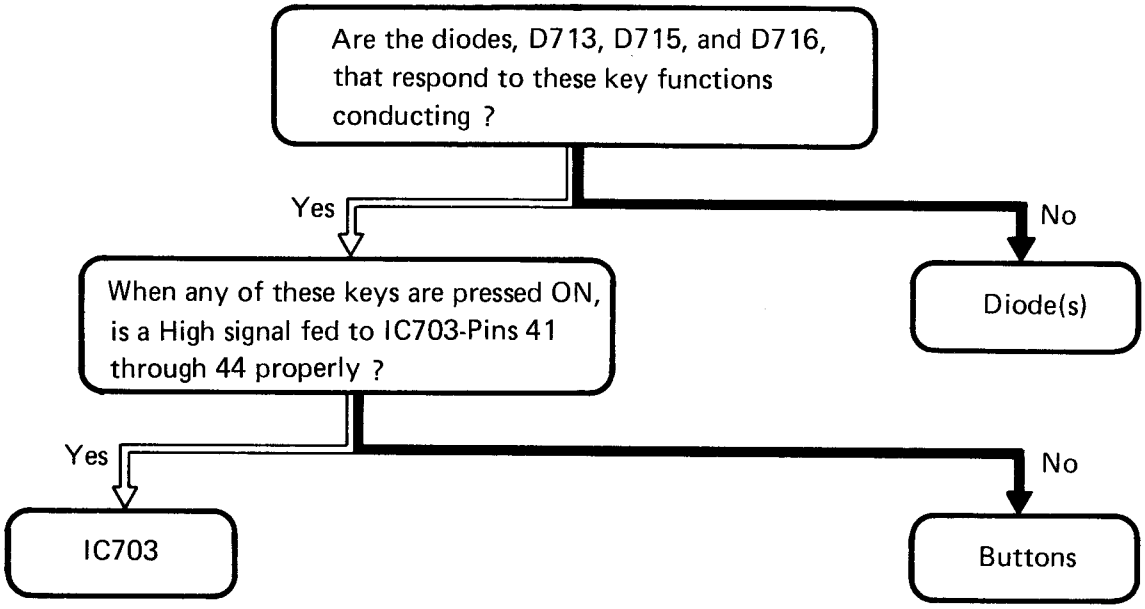

# ADJUSTMENT PROCEDURES

*Disassembly Method*

Caution : Camera Service must be performed in a dust free location to maintain clean lens elements.

## 1. DISASSEMBLY FLOW CHART

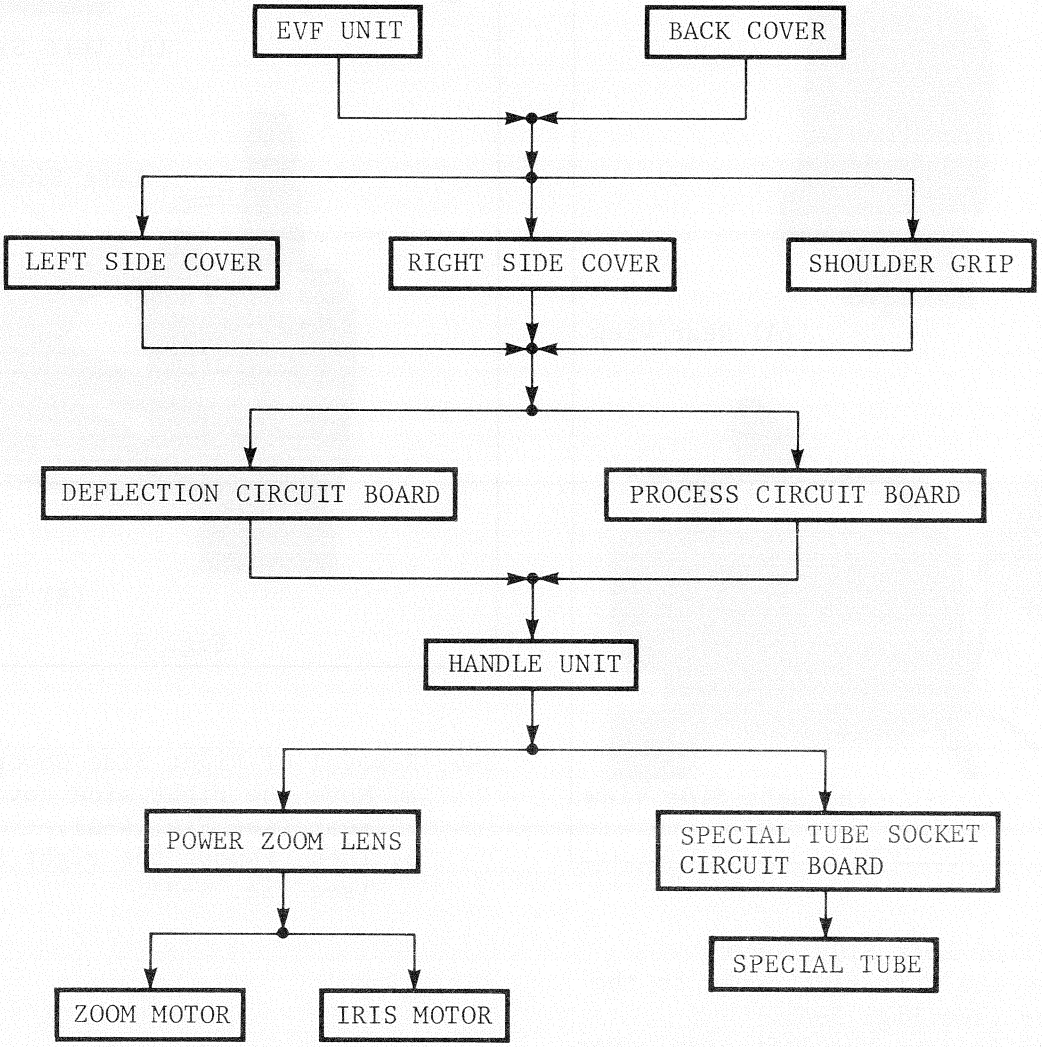


## 2. DETAILED DISASSEMBLY METHOD

2-1. Removal of EVF Unit
Turn the handle knob (A), then, pull out the EVF cord and remove the EVF unit (see Fig. 1).

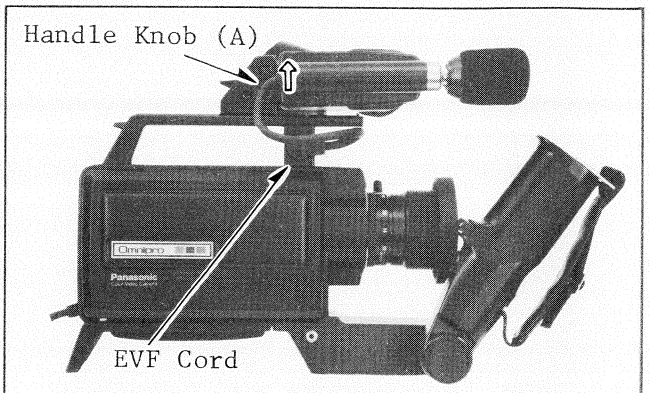


Fig. 1 Left Side View

2-2. Removal of Back Cover
Unscrew 2 screws (A) and remove the back cover (see Fig. 2).

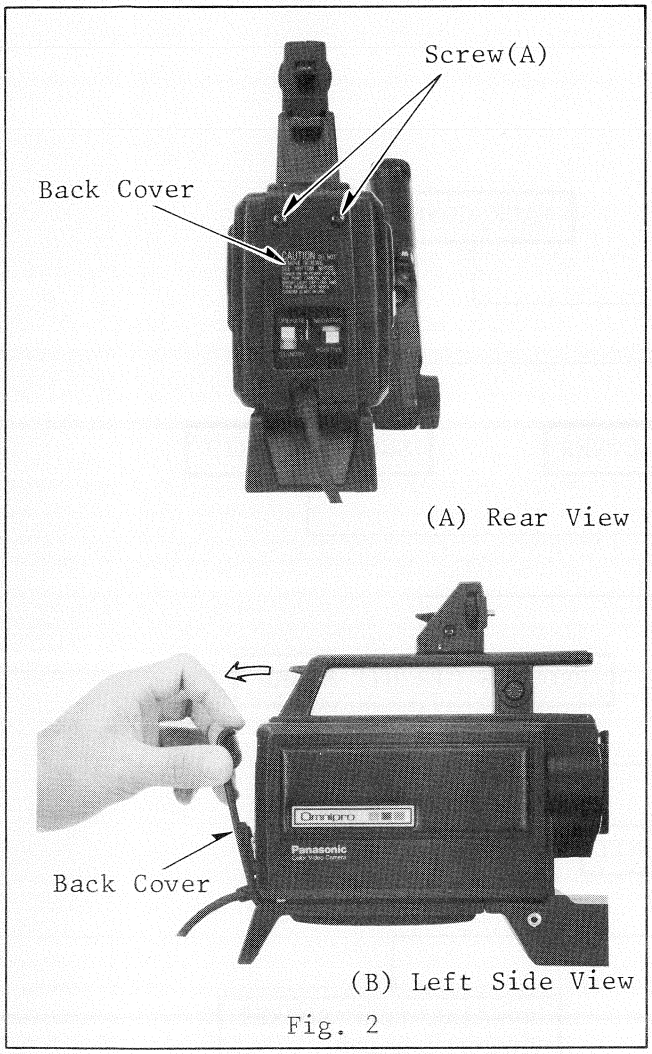

Fig. 2

2-3. Removal of Left Side Cover
a. Move the left side cover to the rear (see Fig. 3-A).
b. Then, remove the left side cover (see Fig. 3-B).

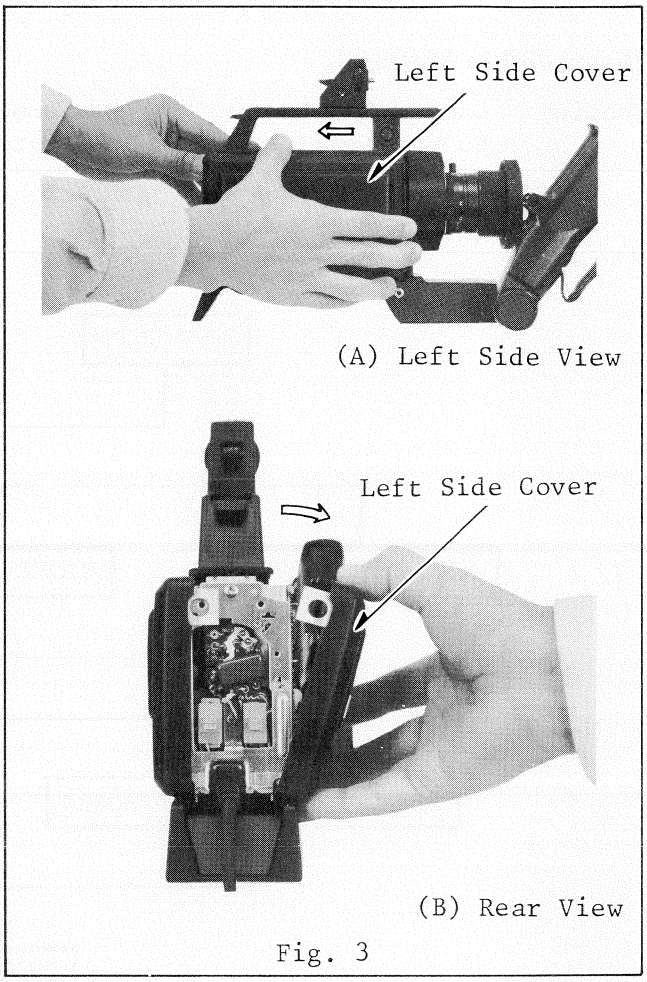

Fig. 3

2-4. Removal of Right Side Cover
a. Move the right side cover to the rear (see Fig. 4-A).
b. Then, remove the right side cover (see Fig. 4-B).

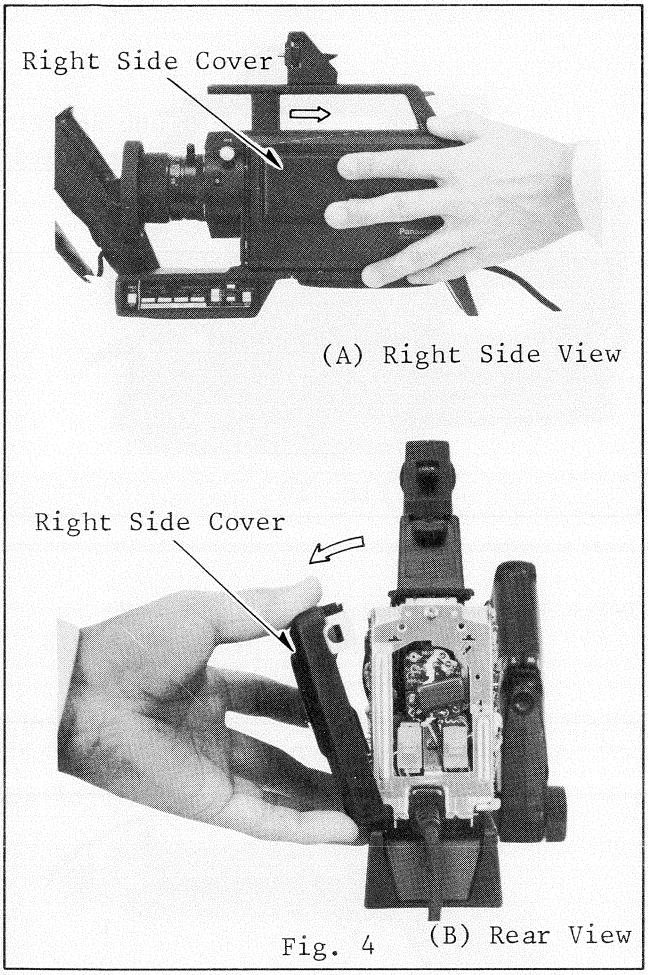

Fig. 4

2-5. Opening of Deflection Circuit Board
Unscrew 2 screws (B) securing the circuit board to the chassis (see Fig. 5).

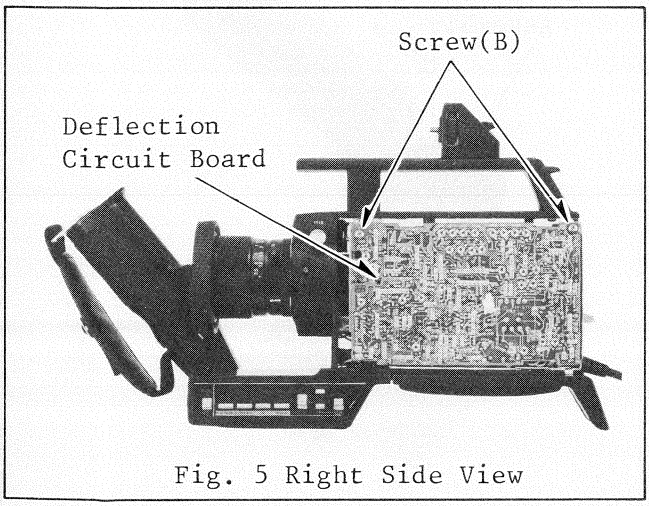

Fig. 5 Right Side View

2-6. Opening of Process Circuit Board
Unscrew 2 screws (C) securing the circuit board to the chassis (see Fig. 6).

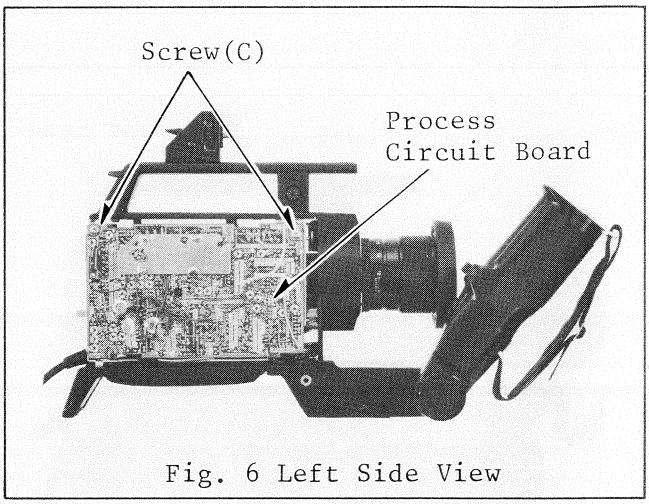

Fig. 6 Left Side View

## 3. REPLACEMENT OF THE SPECIAL TUBE

3-1. Remove both side covers and open the process circuit and deflection circuit boards (refer to section "Disassembly Method").

3-2. Disconnect 2 connectors (P617 and P602) (see Fig. 7).

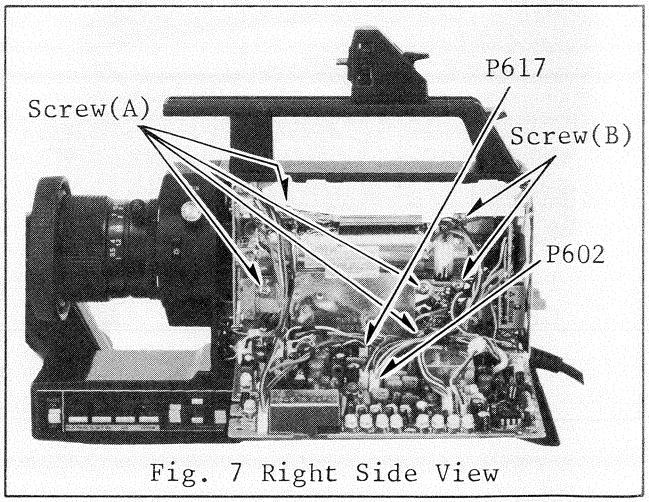

Fig. 7 Right Side View

3-3. Unscrew 4 screws (A) and 2 screws (B) (see Fig. 7).

3-4. Unsolder and remove a ground lead and the preamp. shield cover (see Fig. 8).

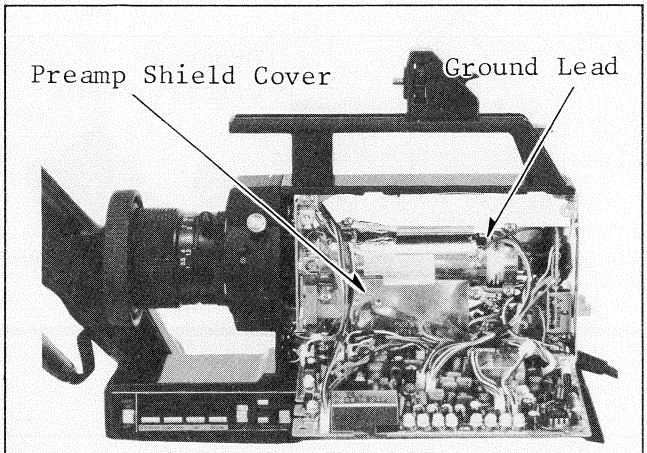


Fig. 8 Right Side View

3-5. Unsolder and remove a white lead from the preamp. circuit board (see Fig.9).

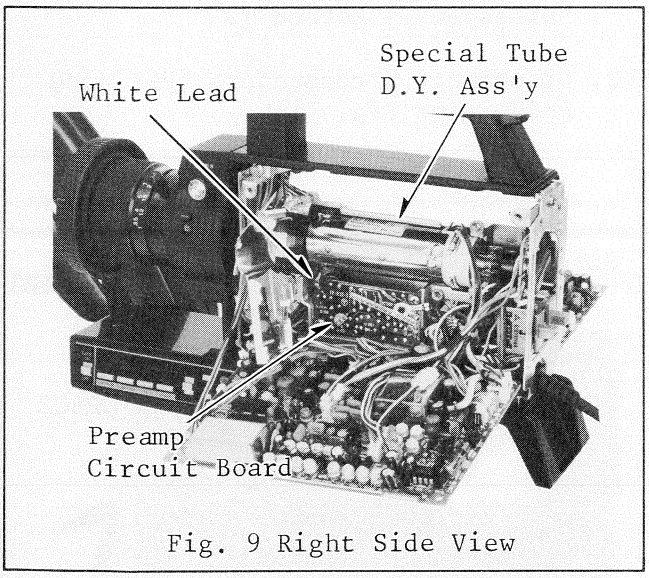


Fig. 9 Right Side View

3-6. Remove the special tube socket circuit board from the special tube (see Fig. 10).

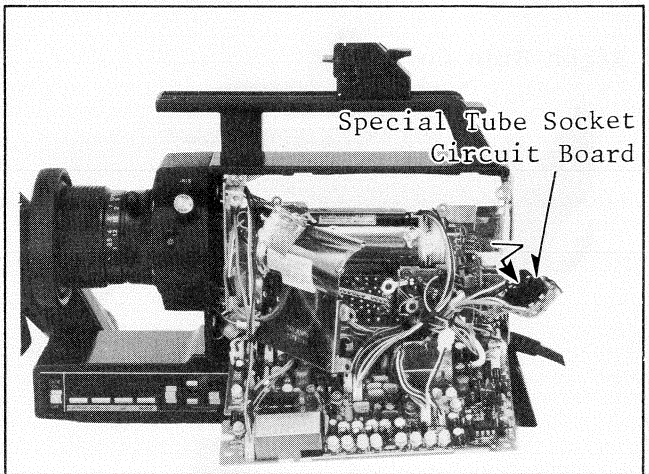


Fig. 10

3-7. Remove the special tube D.Y. assembly with the preamp. shield covered (see Fig. 11).

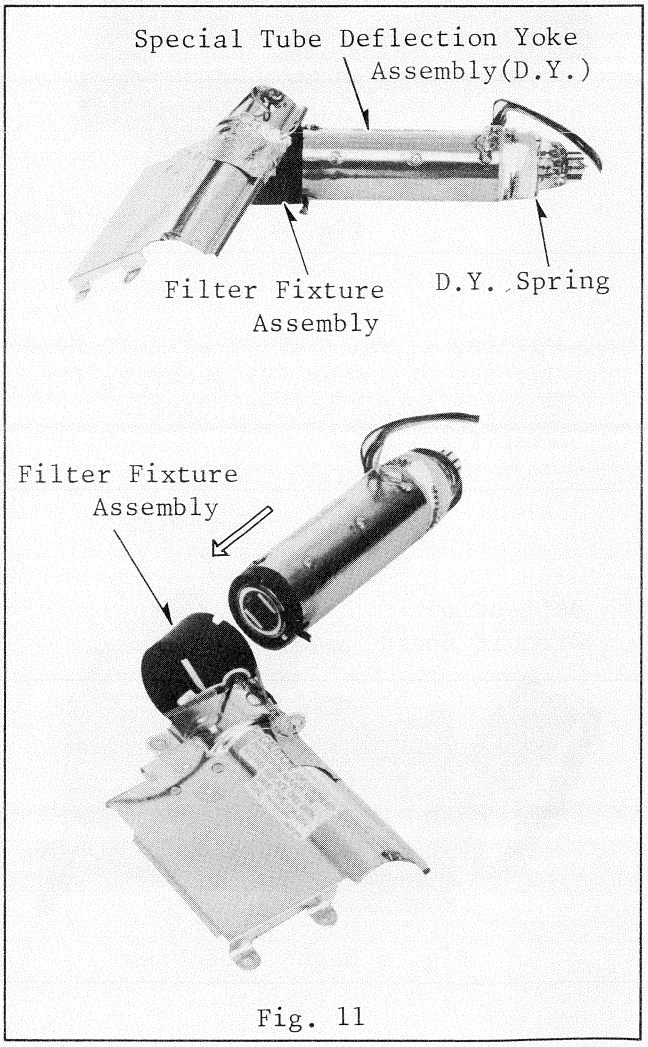


Fig. 11

3-8. Remove the filter fixture assembly and the D.Y. spring from the special tube D.Y. assembly (see Fig. 11-A/B).

3-9. Loosen the clamp screw and remove the special tube from the deflection yoke assembly (D.Y.) (see Fig. 12).

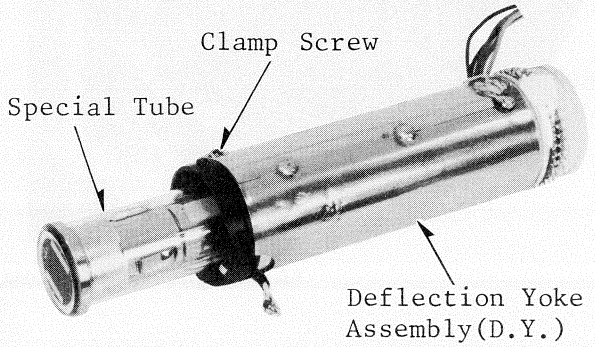


Fig. 12 Special Tube and D.Y.

3-10. Install the new special tube (K4103) in the deflection yoke assembly as shown in Fig. 13.

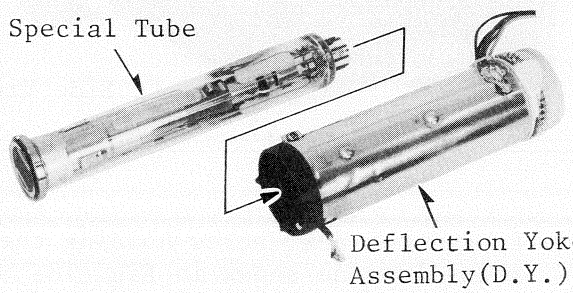


Fig. 13 Special Tube and D.Y.

3-11. Line up the plastic tab on the D.Y. assembly with the silver line on the face of the special tube and the mark, "NAI", should be up side as shown in Fig. 14.

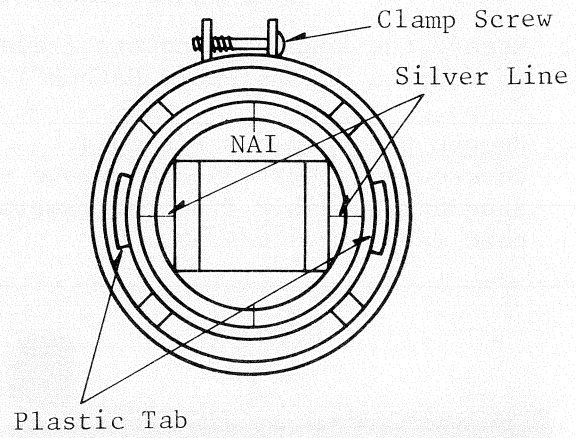


Fig. 14

3-12. Push the special tube in the D.Y. assembly as far as it will go ... using lens cleaning tissue paper to keep the face plate spotless (see Fig. 15).

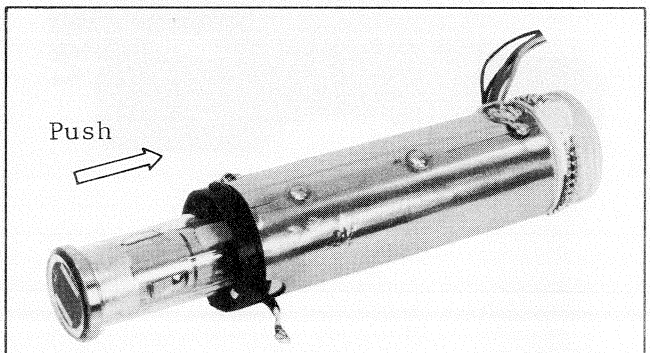


Fig. 15

3-13. Reverse the previous steps.

# 4. REPLACEMENT OF THE POWER ZOOM LENS

4-1. Remove the both side covers (refer to section "Disassembly Method").

4-2. Remove the shoulder assembly. Unscrew 3 screws (A) and remove the shoulder assembly from the camera head (see Fig. 16-A/B).

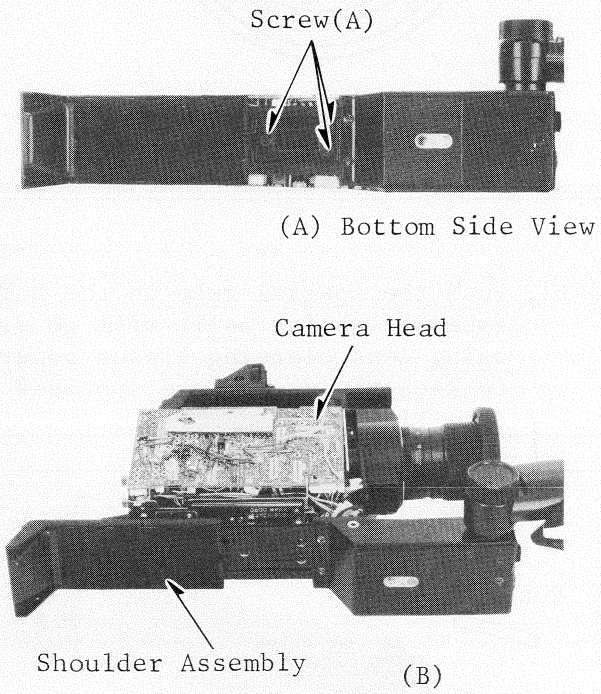


Fig. 16

4-3. Open the process circuit and the deflection circuit boards (refer to section "Disassembly Method").

4-4. Disconnect 2 connectors (connector (Z), P603) (see Fig. 17-A/B).

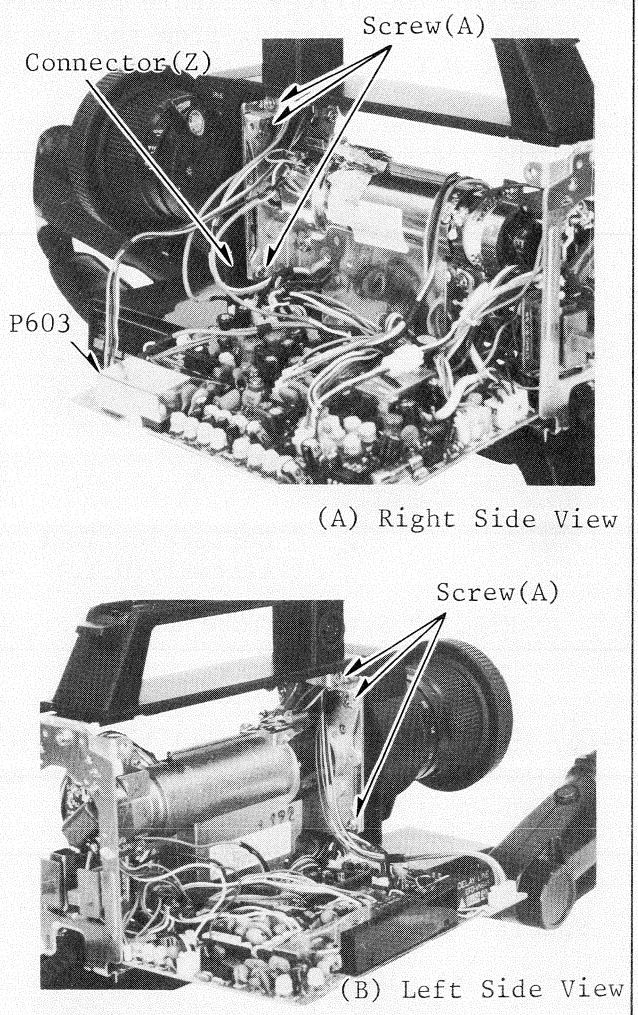


Fig. 17

4-5. Loosen the hex. screw holding the relay lens as shown in Fig. 18.

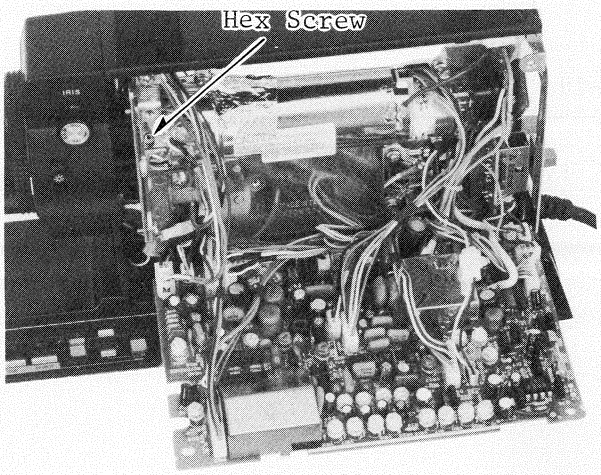


Fig. 18

4-6. Unscrew 6 screws (A) and remove the lens assembly (see Fig. 19).

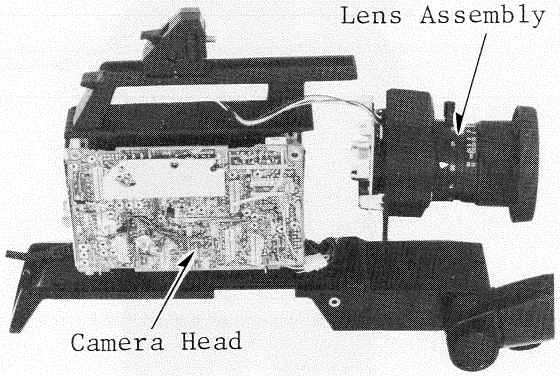


Fig. 19

4-7. Install the new zoom lens ... using lens cleaning tissue paper to keep the lens spotless.

4-8. Reverse the previous steps.

## 5. REPLACEMENT OF ZOOM MOTOR

5-1. Remove the lens assembly (refer to section "Replacement of the power zoom lens).

5-2. Unscrew 2 screws (A) and remove the zoom motor (see Fig. 20-A/B).

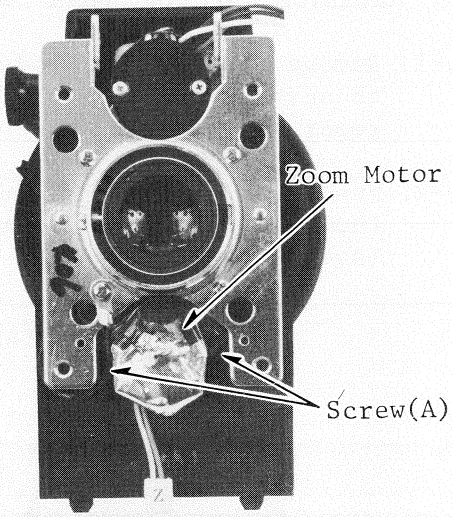


(A) Power Zoom Lens Assembly

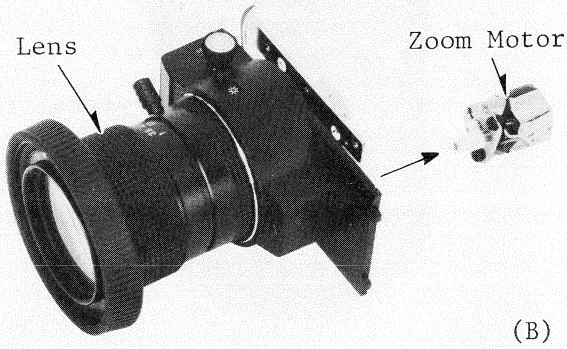


Fig. 20

5-3. Install the new zoom motor.

5-4. Before assembling the power zoom lens to the chassis, confirm that there are no spots on the lens surface.

5-5. Reverse the previous steps.

## 6. REPLACEMENT OF IRIS MOTOR ASSEMBLY

6-1. Remove the power zoom lens (refer to section "Replacement of the power zoom lens").

6-2. Unscrew 4 screws (A) and remove the lens assembly from the chassis (see Fig. 21).

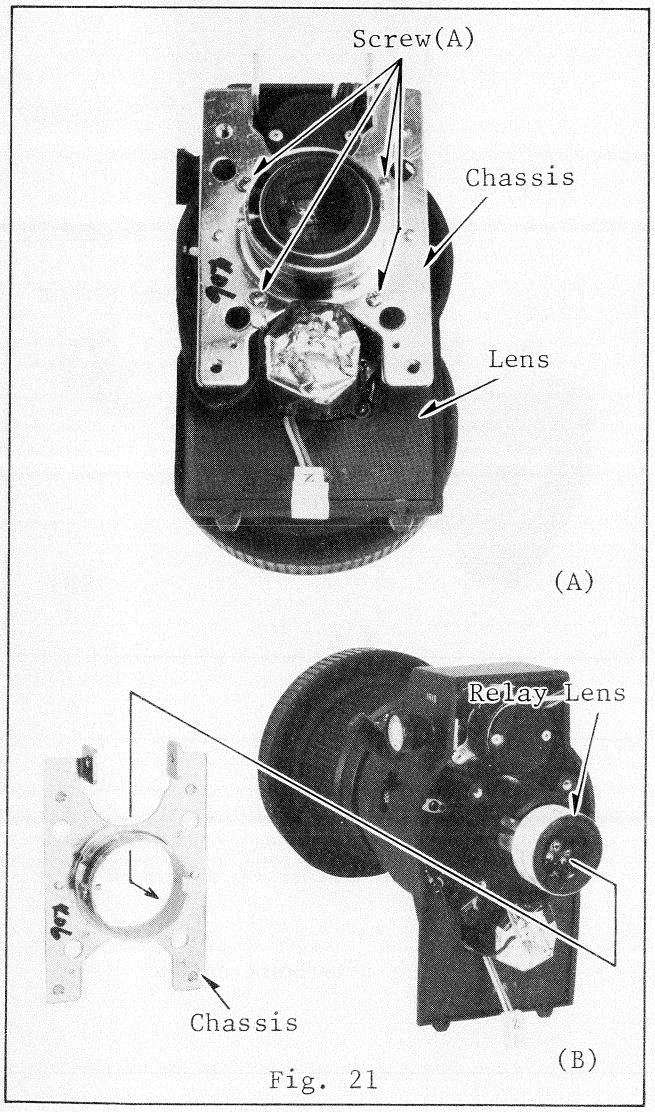

Fig. 21

6-3. Remove the relay lens (see Fig. 21-B).

6-4. Unscrew 4 screws (B) and remove the front cover assembly from the lens (see Fig. 22-A/B).

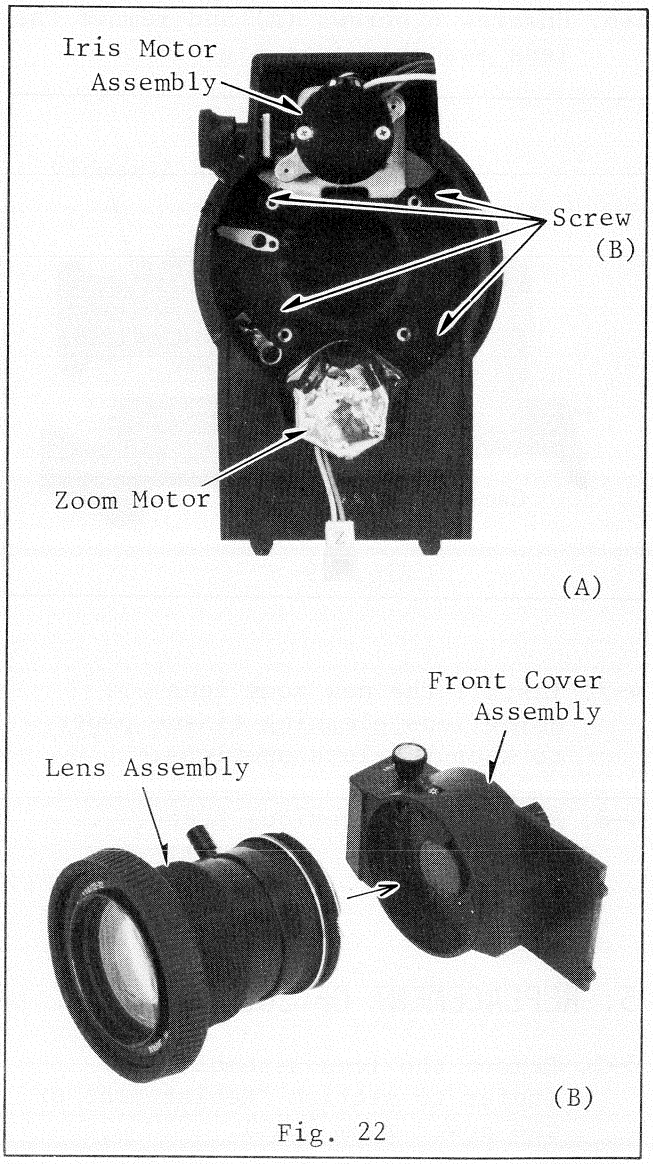

Fig. 22

6-5. Unscrew a screw (C) and remove the color temperature correction switch from the front cover assembly (see Fig. 23).

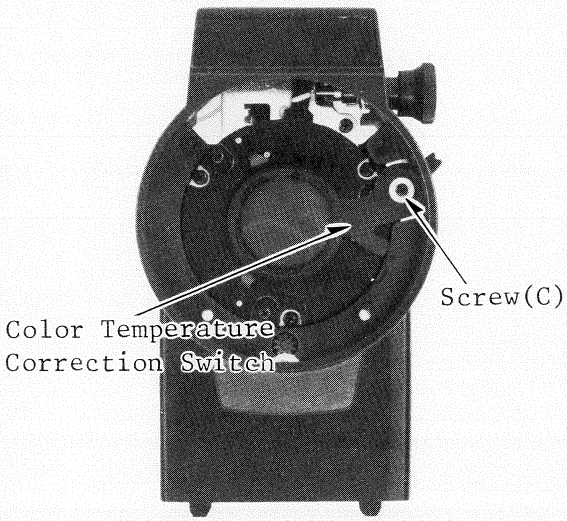


Fig. 23

6-6. Unscrew 3 screws (D) and remove the iris motor assembly (see Fig. 24-A/B).

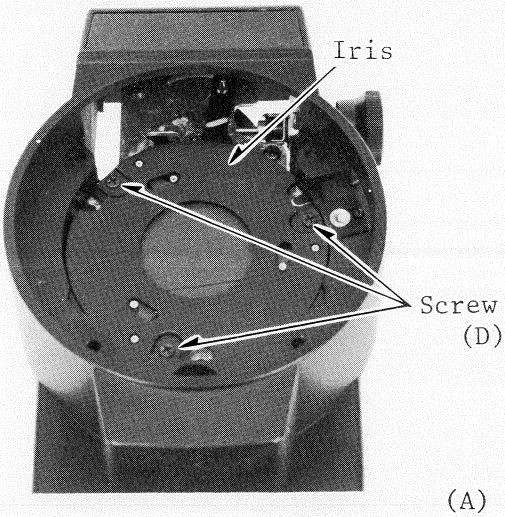


(A)

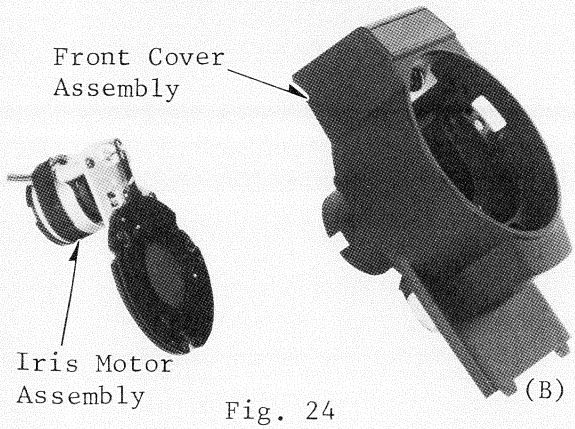


(B)

Fig. 24

6-7. Install the new iris motor assembly ... before assembly the iris motor assembly to the front cover assembly, confirm that there are no dust on the iris motor assembly.

6-8. Reverse the previous steps.

# MEMO

## TEST EQUIPMENT/TOOL LIST

1. Light Box w/Chart

| | | Part Number |
|---|---|---|
| Light Box w/Chart Set | ----- | VFKS002 |
| Grayscale Chart | ----- | VFKS002A |
| Color Chart | ----- | VFKS002B |
| Registration Chart | ----- | VFKS002C |
| Resolution Chart | ----- | VFKS002D |
| Light Box | ----- | VFKS002Y |

Reflection Chart

| | | Part Number |
|---|---|---|
| Reflection Chart Set | ----- | VFKS003 |
| Grayscale Chart | ----- | VFKS003A |
| Color Chart | ----- | VFKS003B |
| Registration Chart | ----- | VFKS003C |
| Resolution Chart | ----- | VFKS003D |
| Color Sheet | ----- | VFKS003E |

2. 3200°K Studio light (See your local photo supply dealer):
   Minimum requirement is 2 flood lights about 350-500 watts each.

3. Luxmeter
   We recommend one of the following:
   A. Portable luxmeter Model No. 3281 by Yokogawa
      Yokogawa Corporation of America
      2 Dart Road Shenandoah, GA 30265
   B. Electronic Foot Candle Meter by Panlux
      Berkey Marketing Company
      25-30 Brooklyn Queens Expressway Woodside,
      New York 11377

4. FM Detector
   Part No. -------- VFKS001

5. Oscilloscope
   Dual Trace, 25mHz, 2mV/DIV.
   Minimum Sensitivity with Delay Mode.

6. Vector Scope

7. VTVM or Digital Voltmeter

8. Tripod

9. Frequency Counter

10. Hex Wrench (1.5mm/7mm).

## Electrical Adjustment Procedures

Preparations:

To achieve the best adjustment results, warm up the camera for approximately 30 minutes before adjusting.
To prevent short-circuits between the camera body and the undersides of the process and deflection circuit boards, place insulating tape on those portions of the circuit boards that may come in contact with the camera body.

[1] +9V ADJUSTMENT

CAUTIONS:

Adjust the voltage to +9 volts. This adjustment should always be performed before any other camera adjustments as voltage adjustment will affect overall camera adjustment. Unless complete camera alignment is to be performed, it is not necessary to adjust the voltage if the error is less than ±0.02 volts.

1. To adjust the voltage to +9 volts, connect a voltmeter to the +9 volt regulator at test point TP611 on the deflection circuit board.
2. Adjust +9 V control VR625 so that the voltmeter indicates +9 volts ±0.01 volts.

[2] DEFLECTION CIRCUIT ADJUSTMENT

## ADJUSTMENT FLOW CHART OF DEFLECTION CIRCUIT (BOARD)

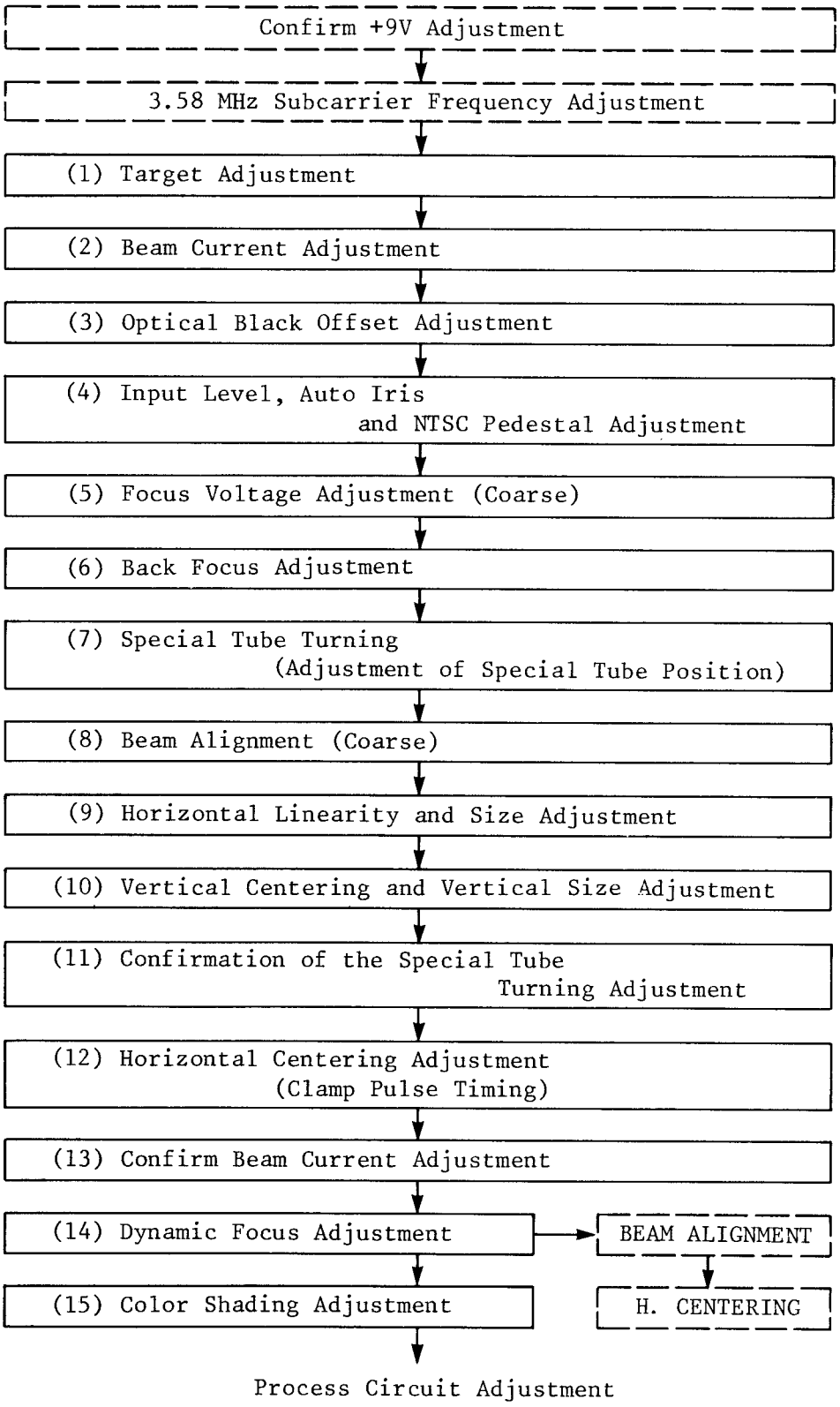

Preparation:

1. Preset the following.

   a) Color Control Knob (White Balance) .... Center position (detent position)
   b) Iris Control Switch .... Manual and close position
   c) Color Temperature Correction Switch .... Indoor position
   d) Standby .... Operate-1 position
   e) Negative/Positive Reverse Switch ..... Normal position

2. Release the Dynamic Focus.

Note: For this procedure, use test point TP607 as the external trigger for the vertical adjustment, and test point TP608 as the external trigger for the horizontal adjustment. This will ensure the flatest response.

| TP | Adj. | Chart | Test Instrument | Scope Trigger |
|---|---|---|---|---|
| TP604 | VR609<br>VR610<br>VR611<br>VR612 | / | Scope | TP608<br>HSS<br>TP607<br>VSS |

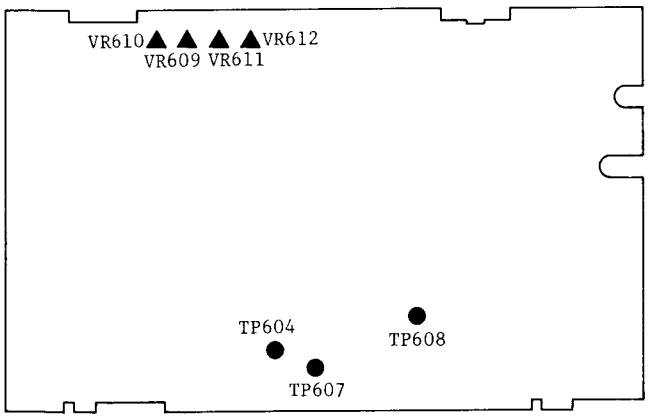


Deflection C.B.A.

(a) First, with the Iris Control Switch, set to the manual, and close the iris, then observe the signal at the horizontal rate at test point TP604.
(b) Trigger the oscilloscope with the test point TP608.
(c) Adjust the horizontal sawtooth control VR609 and the horizontal parabola control VR610 so that the signal waveform is flattest during the horizontal period as shown in Fig. 1.

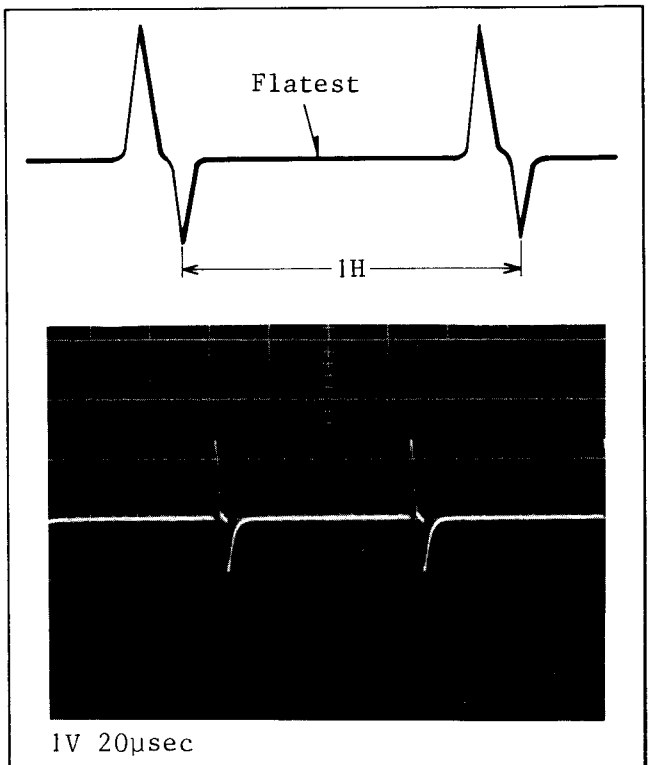


Fig.1

(d) Now, observe the signal at the vertical rate at test point TP604, and adjust vertical parabola control VR611 and the vertical sawtooth control VR612 so that the signal waveform is flatest during the vertical period as shown in Fig. 2.
Trigger the oscilloscope with test point TP607.

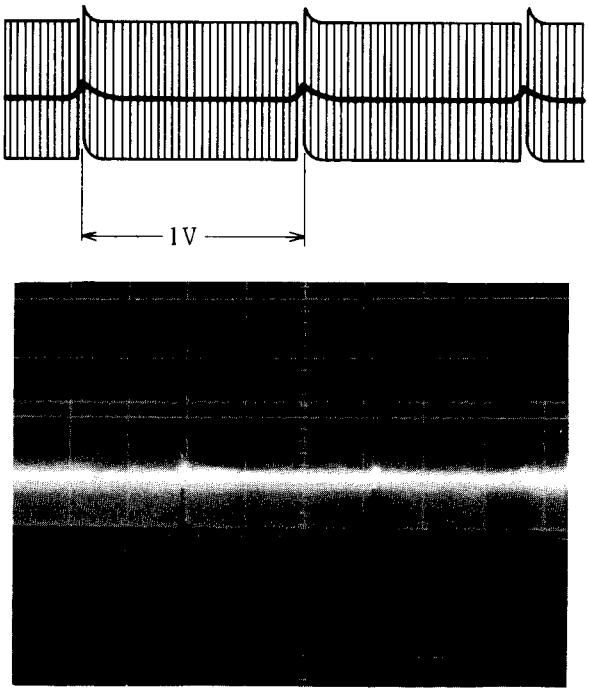


1V 5msec

Fig.2

3. Release the color shading.

(a) Turn VR613, VR614, VR615, VR616, VR617, VR618, VR619 and VR620 to the center position as shown in Fig. 3.

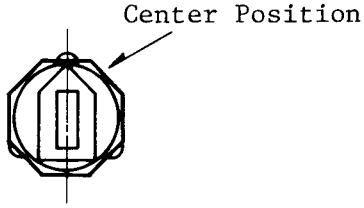


Fig. 3

(b) Turn VR306 fully counterclockwise.

4. Adjust the 3.58 MHz Sub-Carrier Frequency.

| TP | Adj. | Chart | Test Instrument | Scope Trigger |
|---|---|---|---|---|
| TP307 | C344 | / | / | / |

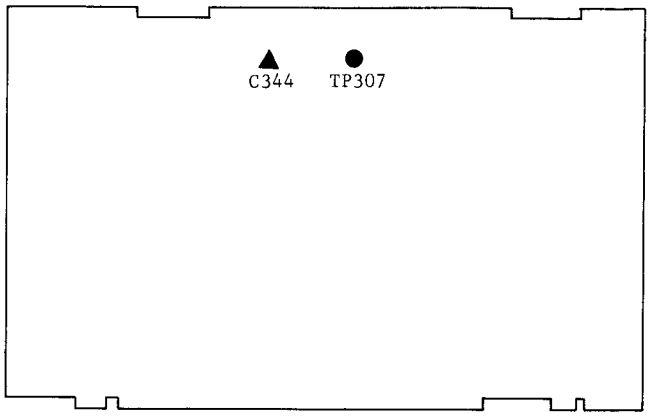


Process C.B.A.

(a) Measure the sub-carrier frequency at TP307.
(b) Adjust capacitor C344 so that the frequency counter indicates 3.579545 MHz ± 50 Hz.

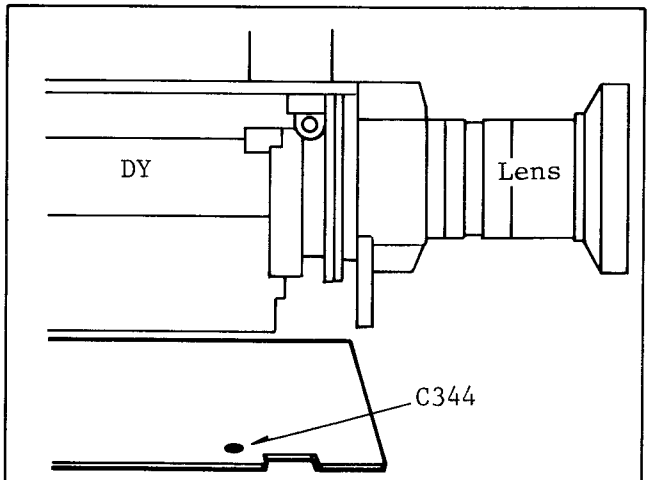


Fig. 4

(1) TARGET ADJUSTMENT

| TP | Adj. | Chart | Test Instrument | Scope Trigger |
|---|---|---|---|---|
| TP601 | VR601 | / | Voltmeter | / |

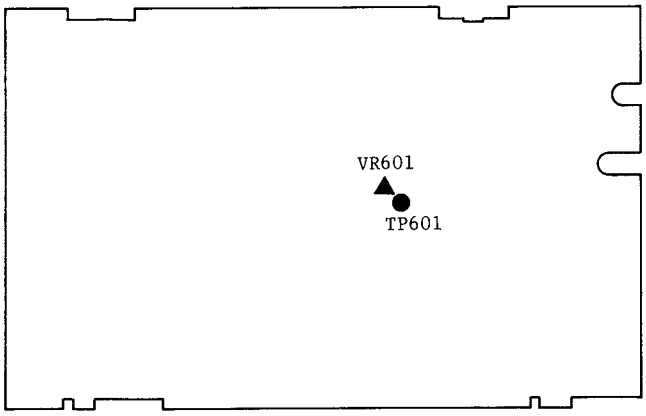


Deflection C.B.A.

Note: Before making any adjustments, you must wait 5 seconds after closing the lens to allow the dark current to stabilize.

1. Set the Iris Control switch to the manual, and close the iris.
2. Connect a 10:1 oscilloscope probe to test point TP601 on the deflection circuit board.
3. Wait 5 seconds after closing the lens to allow the dark current to stabilize.
4. Now adjust the target control VR601 for 55V DC .
5. Set iris control to auto.

(2) BEAM CURRENT ADJUSTMENT

Note: Set the iris control switch to auto.

| TP | Adj. | Chart | Test Instrument | Scope Trigger |
|---|---|---|---|---|
| TP301<br>TP614<br>TP615 | VR605<br>VR6200 | White Light Box | Scope | TP608<br>HSS |

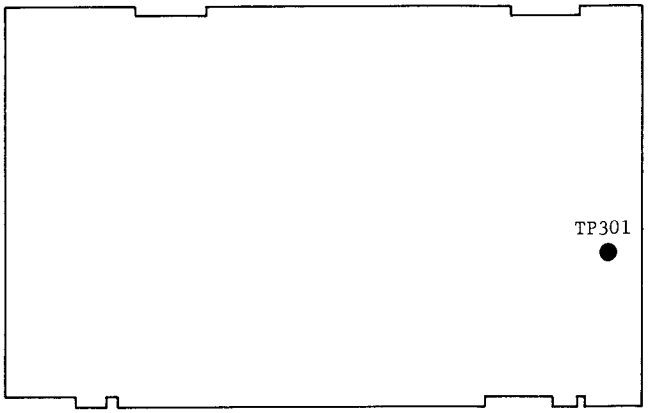


Process C.B.A.

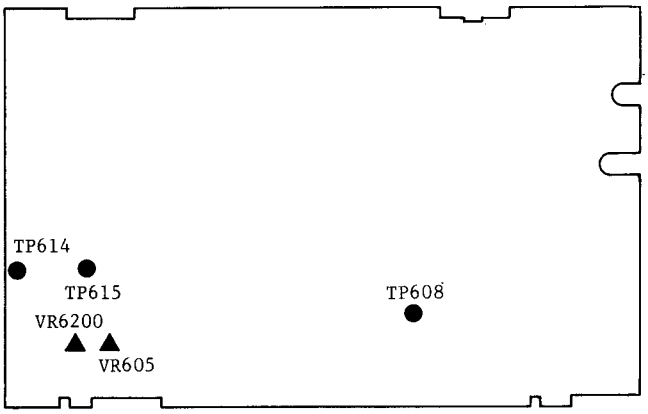


Deflection C.B.A.

1. Connect the oscilloscope to test point TP301 and observe the signal at the horizontal rate.
2. Connect the 560Ω resistor between TP614 and TP615, and stop the ABO circuit function. Trigger the scape using TP608.
3. Aim the camera at far left edge of a light box or other small light source in order to saturate the beam (waveform does not increase).

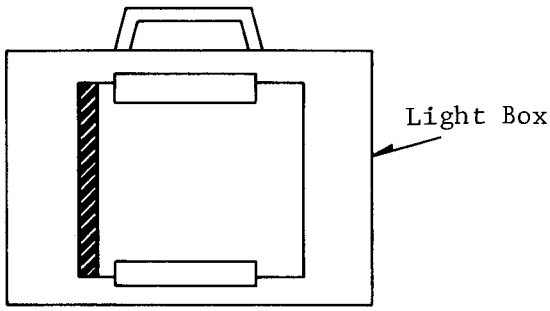


Fig. 5

Note: Use a low ambient room lighting when performing this procedure. If lighting is too high, then close the iris manually.

4. Adjust the beam control VR605, so that signal clipping occurs at 1.8 volts peak-to-peak (see Fig. 6).

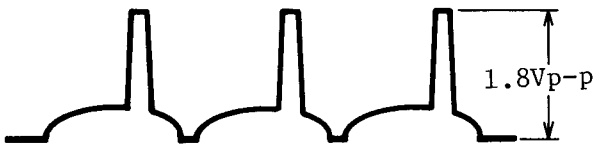


Fig. 6-(A)

If the signal is less than 1.8 V peak-to-peak, use a more intense light source.
Be careful not to damage the pick-up tube with too strong light.

5. Disconnect the 560Ω resistor and adjust VR6200, so that signal clipping occurs at 2.5V peak-to-peak.

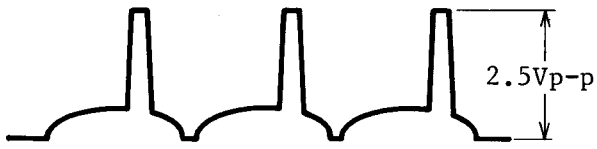


Fig. 6-(B)

(3) OPTICAL BLACK OFFSET ADJUSTMENT

| TP | Adj. | Chart | Test Instrument | Scope Trigger |
|---|---|---|---|---|
| TP303 | VR305 | / | Scope | TP608 HSS |

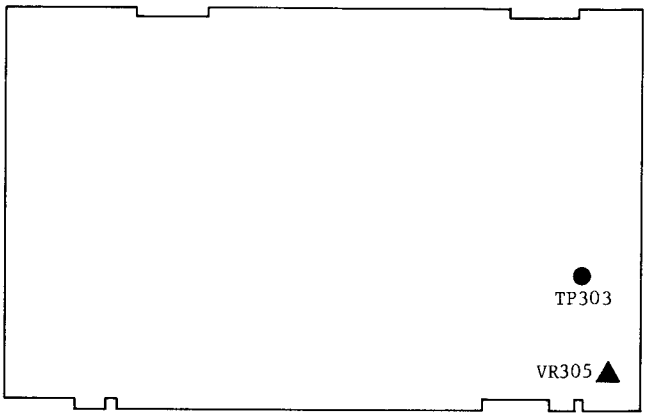


Process C.B.A.

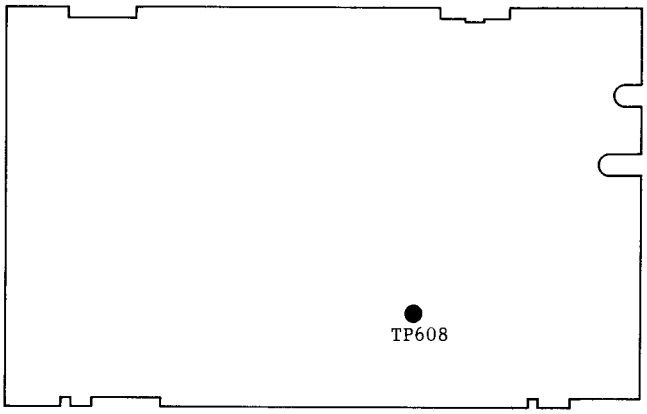


Deflection C.B.A.

Note: Before starting this adjustment, set the iris control switch to manual and close the iris, and wait 10 second.

1. Connect the oscilloscope to test point TP303 and observe the signal at the horizontal rate.
   Trigger the oscilloscope with test point TP608.
2. Adjust the optical black offset control VR305 so that the waveform level is about 20mVp-p.

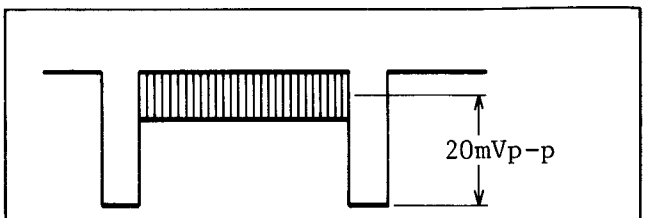


Fig. 7

3. Finally, set the iris control to auto.

(4) INPUT LEVEL, AUTO IRIS AND NTSC PEDESTAL ADJUSTMENT

| TP | Adj. | Chart | Test Instrument | Scope Trigger |
|---|---|---|---|---|
| TP301<br>TP302<br><br>P306-<br>Pin ① | VR301<br>VR302<br>VR308<br>VR318<br>VR604<br>VR606 | Gray Scale | Scope | TP608<br>HSS |

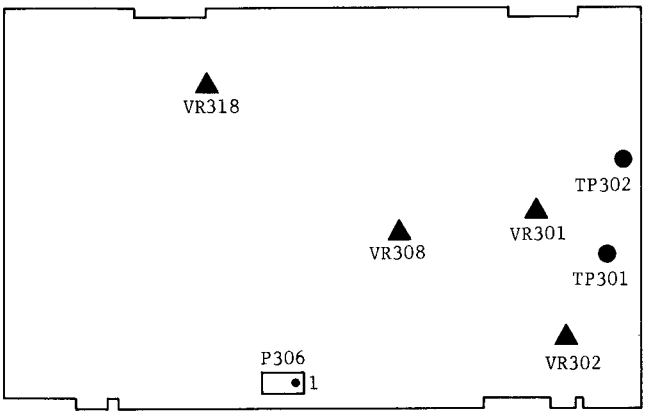


Process C.B.A.

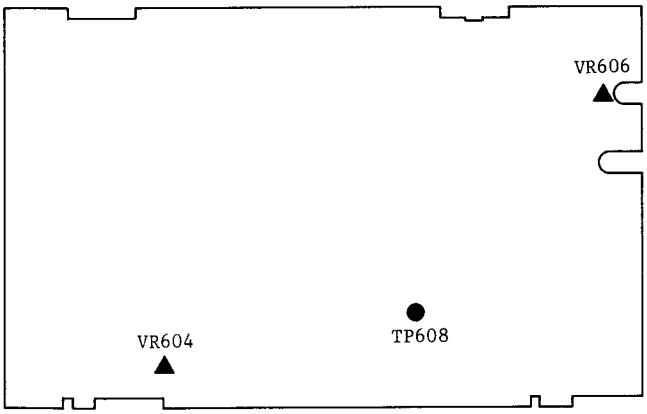


Deflection C.B.A.

Note: If a reflection type gray scale chart is used, a light intensity of between 1400 and 2000 lux will be required.

1. Aim the camera at the gray scale chart and set iris control to "Auto".
2. Connect the oscilloscope to test point TP301 and observe the signal at the horizontal rate. Trigger the oscilloscope with test point TP608.
3. Then to release the carrier signal, turn focus control VR604 fully clockwise.
4. Adjust VR606 to 600mVp-p.
5. Then adjust VR604 so that the carrier signal is maximized.

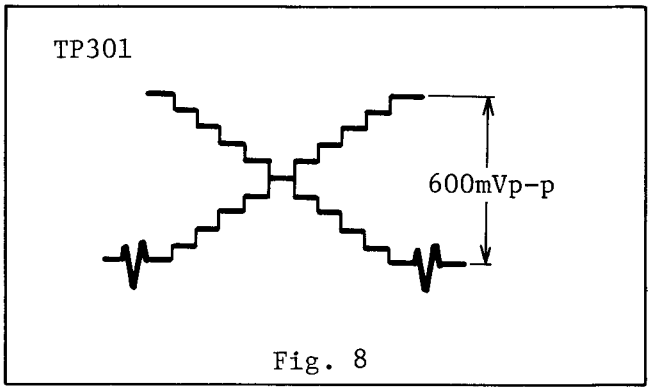


Fig. 8

6. Set iris control to manual and close the lens iris.
7. Connect the oscilloscope to the connector P306-pin (1) and observe the NTSC signal.
8. Adjust VR308 to 60mVp-p.

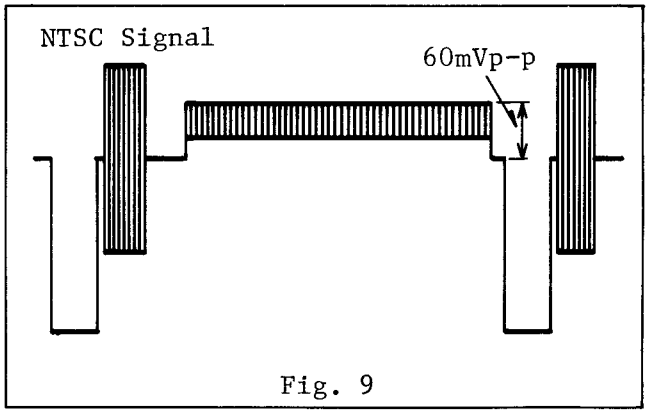


Fig. 9

9. Set iris control to auto and aim the camera at the gray scale chart.
10. Connect the oscilloscope to the connector P306-pin (1) and observe the NTSC signal.
11. Turn VR318 fully clockwise position, to reduce the carrier signal.
12. Adjust VR302 to 0.7 Vp-p.
13. Turn VR318 fully counterclockwise. Confirm signal at TP301 is 600mVp-p. If it is not then readjust.
14. Then connect the oscilloscope to test point TP302 and observe the signal at the horizontal rate.
15. Adjust VR301 to 600mVp-p.

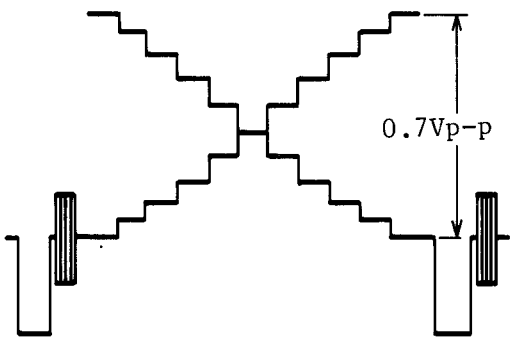


Fig. 10-(A)

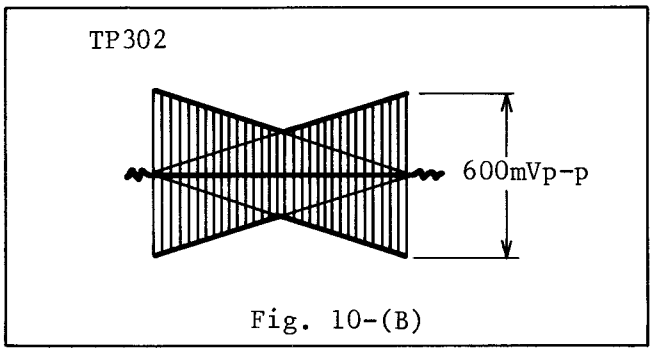


Fig. 10-(B)

(5) FOCUS VOLTAGE ADJUSTMENT (COARSE)

1. Aim the camera at an evenly illuminated white surface (use 1500 lux or Light Box) and focus the lens.
2. Adjust the focus control VR604, so that the magenta area in the monitor picture is maximized and the green area is minimized.

(6) BACK FOCUS ADJUSTMENT

1. Aim the camera at an object more than 10 meters (33 feet) away, and zoom all the way in (maximum close up).
2. Focus the lens on the object.
3. Loosen the hex screw using a 1.5 mm hex wrench on the relay lens.

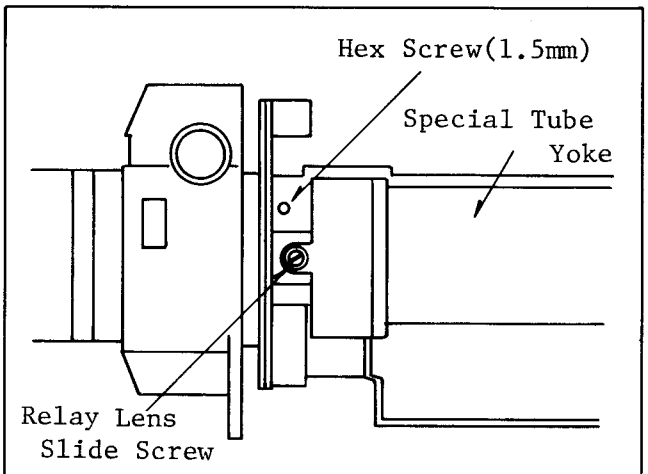


Fig. 11 Deflection Yoke View

4. Zoom all the way back and adjust the relay lens slide screw until the sharpest focus is obtained.
5. Repeat this procedure-zoom in, focus, zoom out, and adjust-until the best focus is obtained over the entire zoom range.
6. Tighten the hex screw using a 1.5 mm hex wrench on the relay lens. Do not overtighten the hex screw. You may crack the lens assembly or the lens housing.

(7) SPECIAL TUBE TURNING (ADJUSTMENT OF SPECIAL TUBE POSITION)

| TP | Adj. | Chart | Test Instrument | Scope Trigger |
|---|---|---|---|---|
| TP302 | VR604 Special Tube Turning | White | Scope | TP607 VSS |

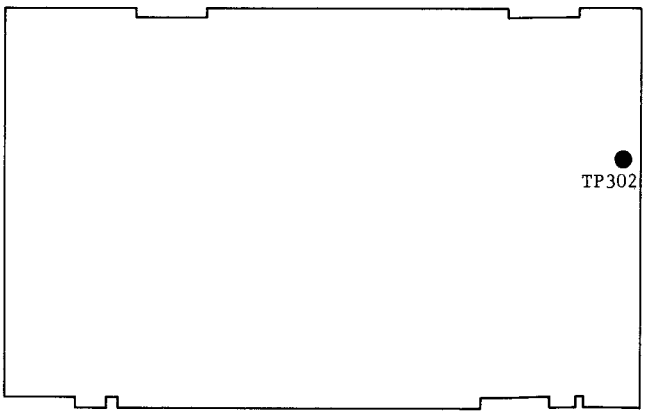


Process C.B.A.

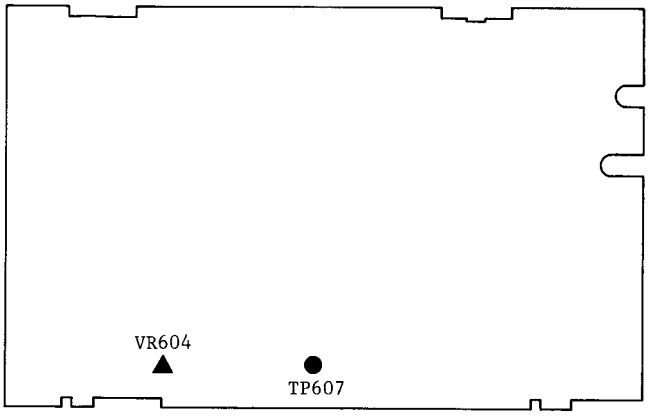


Deflection C.B.A.

1. Aim the camera at a white chart or white screen and focus the lens.
2. Connect the oscilloscope to test point TP302 and observe the signal at the vertical rate. Trigger the oscilloscope with test point TP607.
3. Adjust Focus Control VR604 to the maximum signal level as shown in Fig. 12.

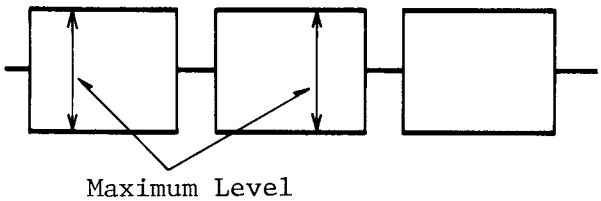


Fig. 12

4. Delay the sweep of the center portion of the vertical signal waveform and observe a few horizontal lines.
5. Loosen the special tube clamp screw on the deflection yoke assembly as shown in Fig. 13.

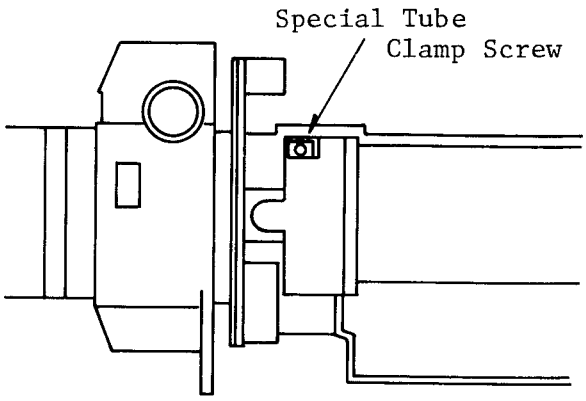


Fig. 13 Deflection Yoke View

6. Now, rotate the special tube socket from the back, using a 7mm hex wrench, so that the waveform for each horizontal scan line is free from beat and ripple.
   Do not worry about differences in amplitude.

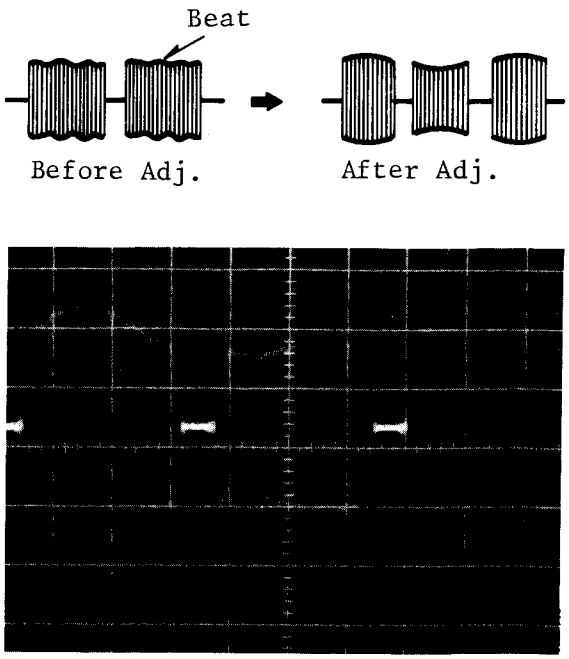


Fig. 14 Waveform of Proper Special Tube Turning

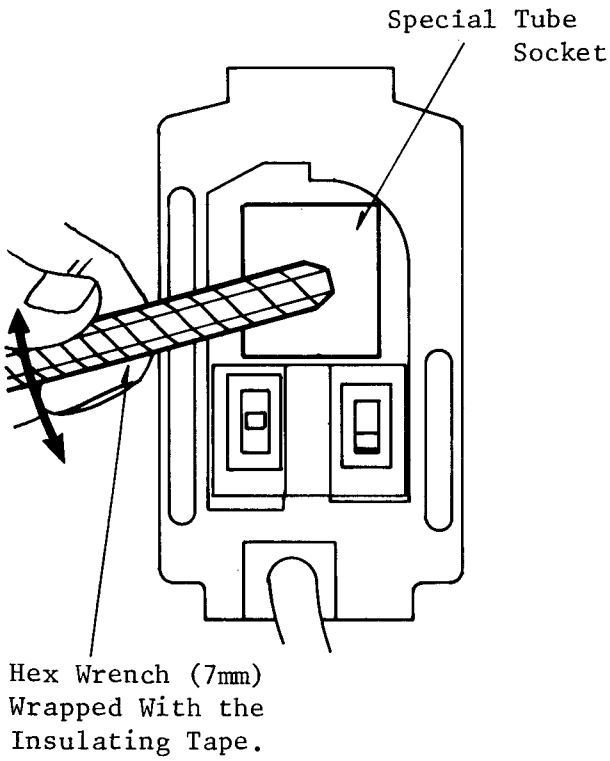


Fig. 15

Note: Be careful not to touch the connector on the special tube. The high voltage at the connector may give you a severe shock and perhaps damage the special tube.

7. Finally, tighten the special tube clamp screw.

(8) BEAM ALIGNMENT (COARSE)

| TP | Adj. | Chart | Test Instrument | Scope Trigger |
|---|---|---|---|---|
| — | Two Alignment Rings | White | Color Monitor | — |

1. Cut the lock paint on the alignment rings before attempting to rotate the rings.

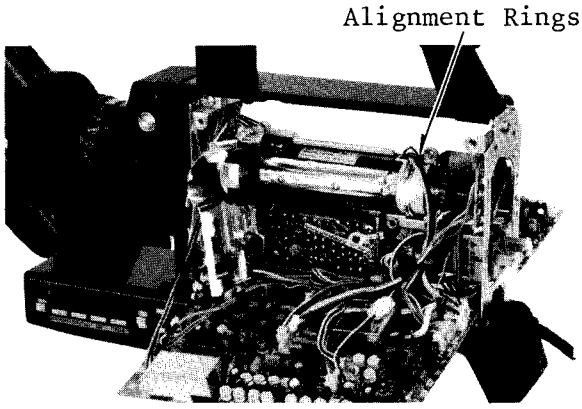


Fig. 16

2. Aim the camera at a white chart or white screen, and turn the color control knob clockwise (Red).
3. Observe the raster on the TV monitor and adjust the two alignment rings (see Fig. 16) so that the magenta color covers on whole screen as shown in Fig. 17.

Note: You may observe discoloration at the edges and corners. Disregard this as the Dynamic Focus adjustment procedure will clean this up.

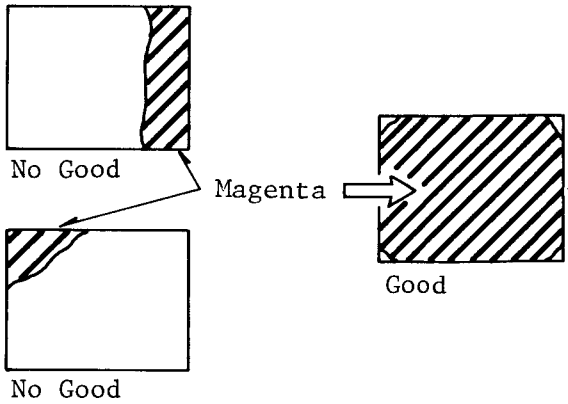


Fig. 17 TV Screen

4. Paint-lock the alignment rings with either white paint or lacquer.
5. Finally, turn the color control knob back to the center position.

(9) HORIZONTAL LINEARITY AND SIZE ADJUSTMENT

| TP | Adj. | Chart | Test Instrument | Scope Trigger |
|---|---|---|---|---|
| TP302<br>4.3 MHz<br>Carrier<br>Composite<br>Blanking | VR622<br>H. Size<br>VR623<br>H. Lin (1)<br>VR624<br>H. Lin (2) | White | Scope<br>FM<br>Detector | TP608<br>HSS |

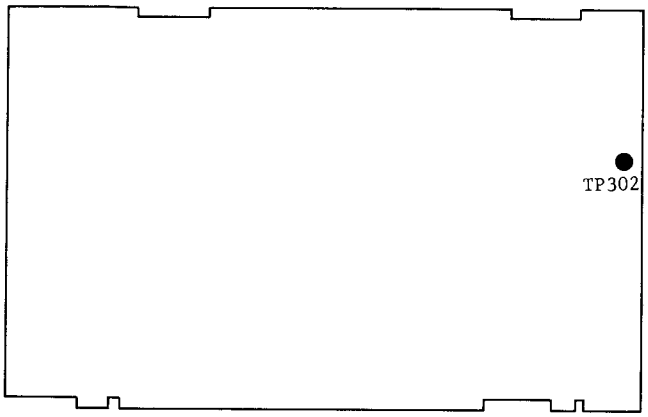


Process C.B.A.

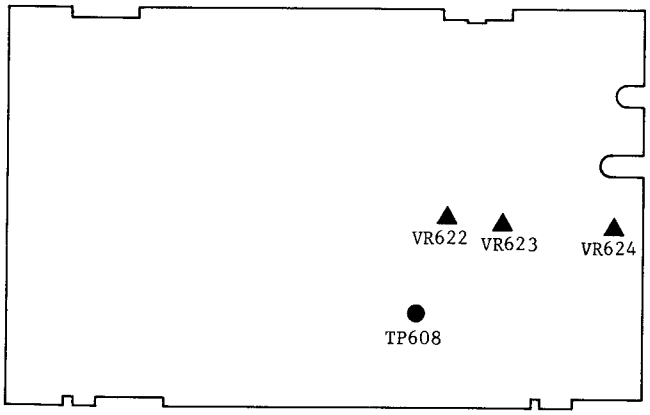


Deflection C.B.A.

1. Aim the camera at white chart or white screen.
2. Check the focus adjustment and, if necessary, readjust Focus Control VR604.
3. Turn the FM detector knob to the Horizontal Size and Linearity position.
4. Turn the switch on the rear panel to the 4.3 MHz position.

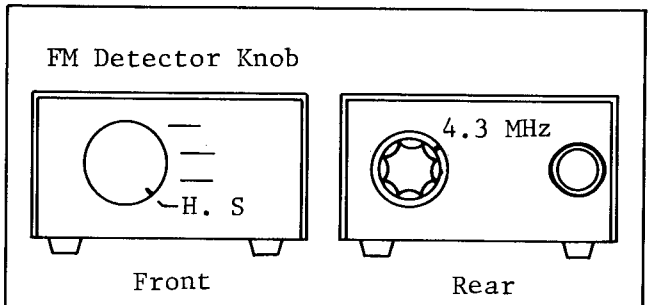


Fig. 18 FM Detector

5. Connect the FM detector input to test point TP302, connect the FM detector output to the oscilloscope input.
   Connect the FM detector blanking to test point TP308.
   Connect the FM detector +9V line to test point TP611.
   Connect the FM detector ground to the camera ground.

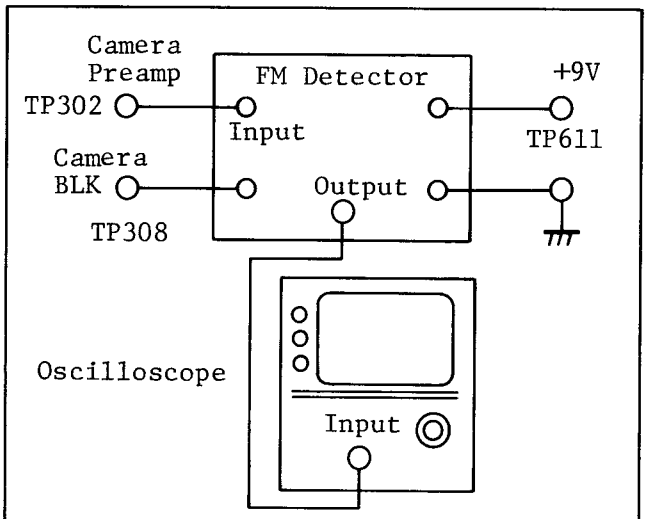


Fig. 19 Connection of FM Detector

6. Now, adjust the horizontal size control VR622, so that the signal is centered on the blanking line, as shown in Fig. 20. Trigger the oscilloscope with test point TP608.

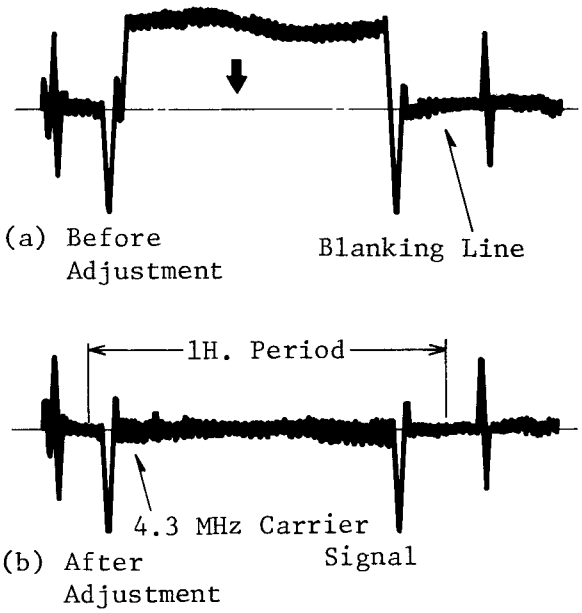


Fig. 20 Waveform of Proper Adjustment

7. Finally, adjust the horizontal linearity 1 control VR623, and the horizontal linearity 2 control, VR624, so that the waveform on the oscilloscope is as flat as possible. Horizontal Linearity 1 controls the horizontal sweep for the left side of the picture, while Horizontal Linearity 2 controls the overall linearity.

(10) VERTICAL CENTERING AND VERTICAL SIZE ADJUSTMENT

| TP | Adj. | Chart | Test Instrument | Scope Trigger |
|---|---|---|---|---|
| TP302 4.3 MHz Carrier | VR602 V. Size VR603 V. Cent. | White | Scope | TP607 VSS |

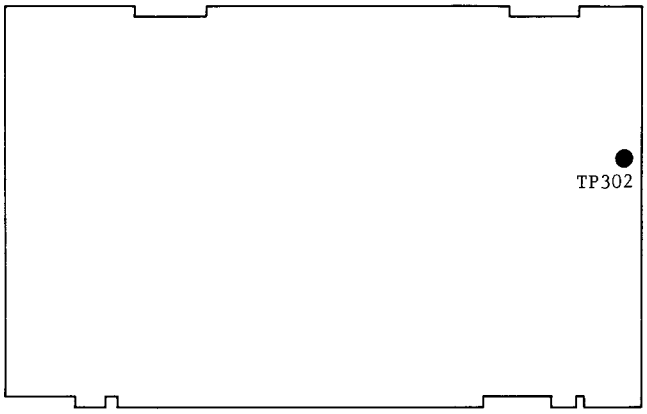


Process C.B.A.

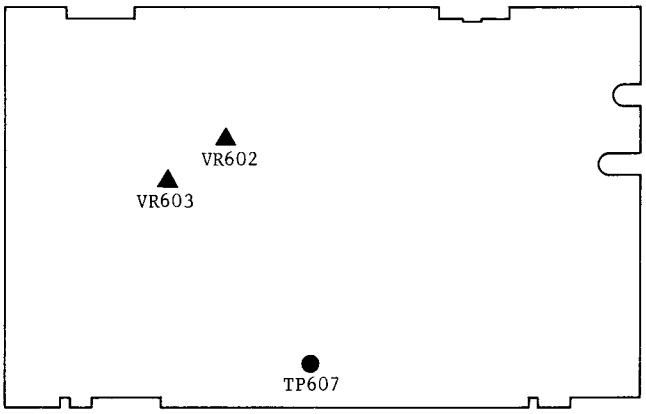


Deflection C.B.A.

1. Aim the camera at a white chart.
2. Connect the oscilloscope to test point TP302 and observe the vertical interval of the 4.3 MHz carrier signal.
   Trigger the oscilloscope with test point TP607.
3. Adjust the vertical size control, VR602, so that the beat in the signal is minimized. These beats will appear if the vertical size is not properly adjusted. Properly adjusted, there should be a maximum of one beat per envelope.

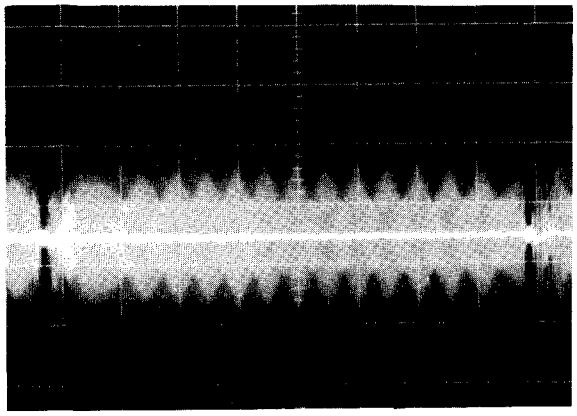

Before Adj.
0.2V 2msec

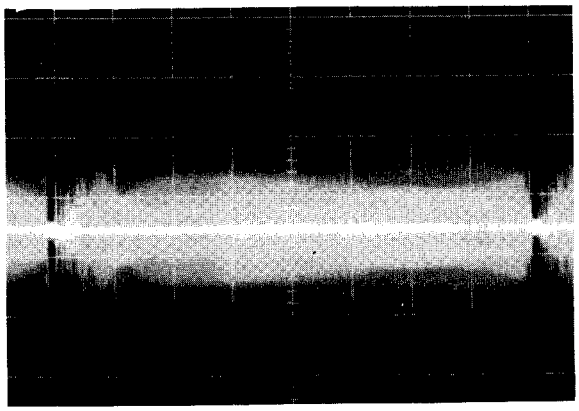

After Adj.
0.2V 2msec

Fig. 21 Waveform of V. Period at TP302

4. Now aim the camera at a small object so that the object is in the center of the monitor screen.
5. Adjust the vertical center control, VR603, so that the small object does not shift vertically as you zoom in and out.

(11) CONFIRMATION OF THE SPECIAL TUBE TURNING ADJUSTMENT

Check the special tube turning adjustment and adjust it if necessary. If the adjustment is correct, go on to the next procedure, step (12).

(12) HORIZONTAL CENTERING ADJUSTMENT

(Clamp Pulse Timing)

| TP | Adj. | Chart | Test Instrument | Scope Trigger |
|---|---|---|---|---|
| TP301 Preamp Output TP317 CP1 | VR621 H. Cent. | White | Scope | TP608 HSS |

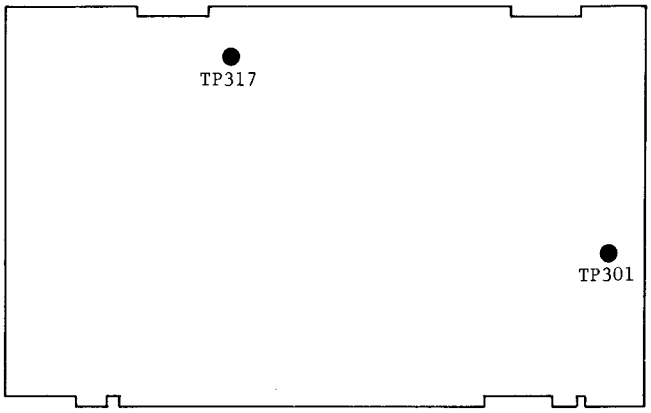


Process C.B.A.

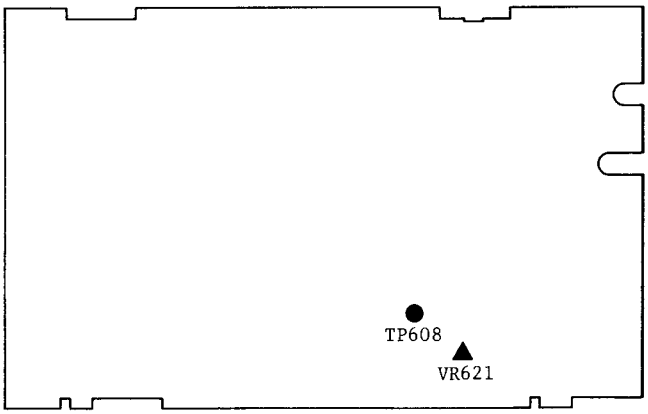


Deflection C.B.A.

1. Aim the camera at a white chart.
2. Next, connect an oscilloscope probe to test point TP301 and observe the horizontal blanking interval of the signal.
   Trigger the oscilloscope with test point TP608.
3. Connect the other oscilloscope probe to the clamp pulse 1 (CP1) test point, TP317.
4. Set the oscilloscope in the delay mode.

5. Adjust the horizontal centering control, VR621, so that the time between the trailing edge of the video signal, in other words, the front porch of the optical black, and the leading edge of the clamp pulse 1 signal (TP317) is 1.5 μsec. as shown in Fig. 22.

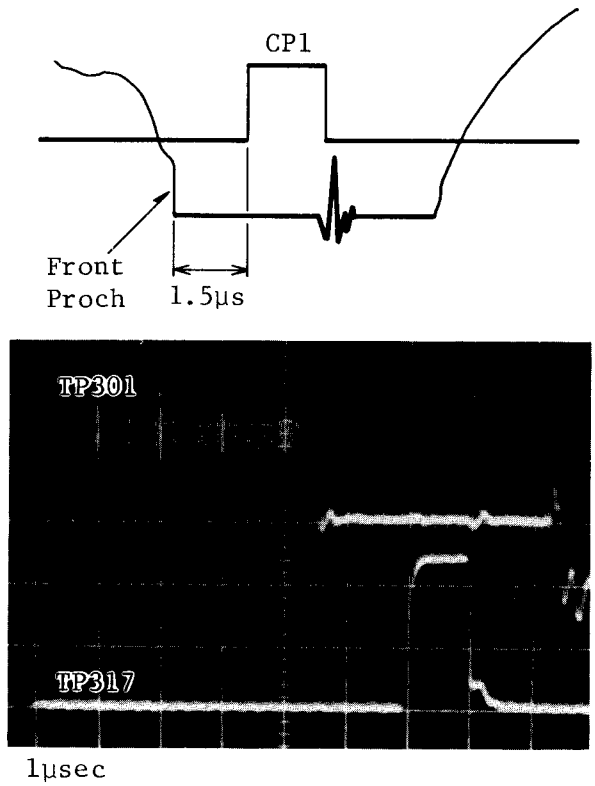


Fig. 22 Waveform for H. Cent.
(H. Blanking Signal at TP301 and CP1)

Note: With some special tubes, the oscilloscope display will show a double trace at the end of a horizontal line. If this should occur, reconfirm the special tube turning adjustment. If the special tube adjustment is correct, adjust the horizontal centering control VR621 so that the time between the trailing edge (a) of the video signal and the leading edge of the clamp pulse 1 signal is 1.5 μsec.

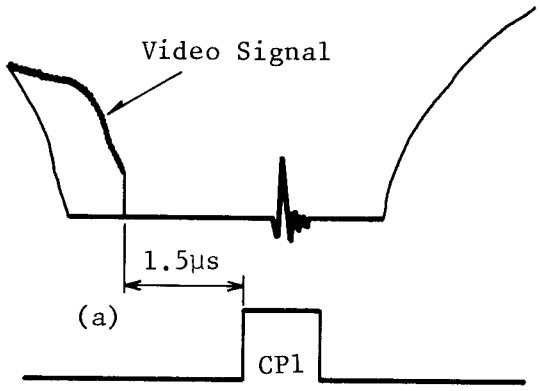


Fig. 23

(13) CONFIRM BEAM CURRENT ADJUSTMENT

If target adjustment is made, check and readjust the beam current (step 2) if necessary.
If the adjustment is correct, go on to the next procedure, step (14).

(14) DYNAMIC FOCUS ADJUSTMENT

| TP | Adj. | Chart | Test Instrument | Scope Trigger |
|---|---|---|---|---|
| TP311 R-Y Signal | VR609 H. Saw. VR610 H. Para. VR611 V. Para. VR612 V. Saw. | White | Scope Color Monitor | TP608 HSS |

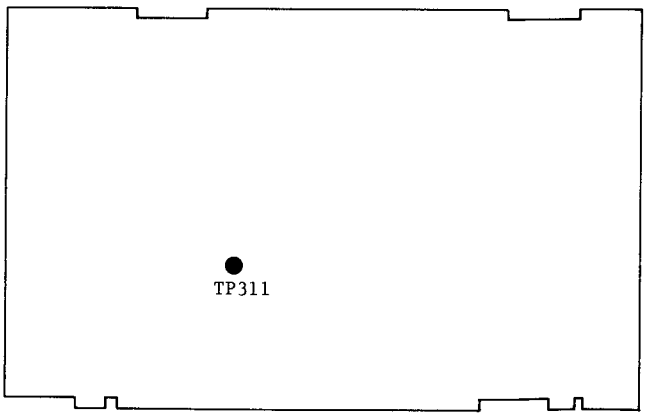


Process C.B.A.

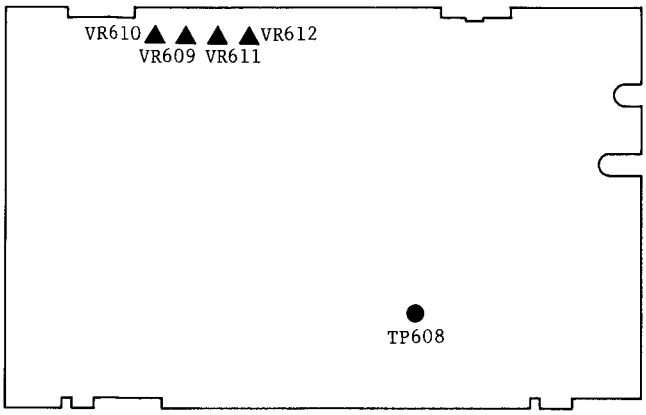


Deflection C.B.A.

1. Aim the camera at a white chart.
2. Observe the color monitor and adjust the focus control, VR604, so that the center area of monitor shows red (magenta) color (minimize green color), if necessary.
3. Connect the oscilloscope to test point TP311 and observe the R-Y signal at H. rate.
   Trigger the oscilloscope with test point TP608.
4. Alternately adjust vertical parabola control, VR611, and vertical sawtooth control, VR612 so that the signal level is minimized as shown in Fig. 24.

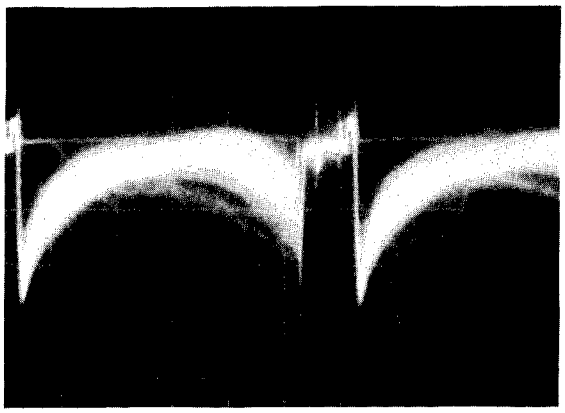

Before Adj.
100mV 10μsec
V. rate

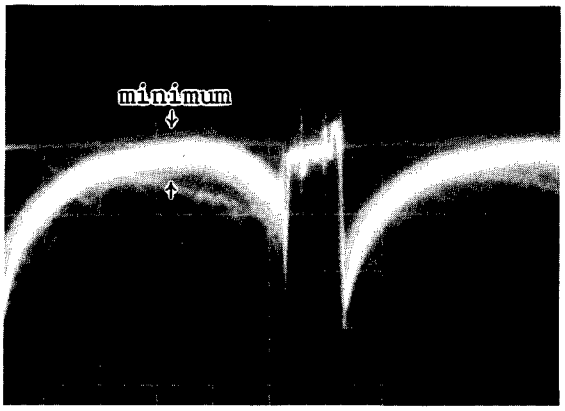


After Adj.
100mV 10μsec
V. rate

Fig. 24 Waveform of TP311

5. Then, alternately adjust horizontal sawtooth control, VR609, and horizontal parabola control, VR610 for the signal waveform to be flatest during horizontal period as shown in Fig. 25.

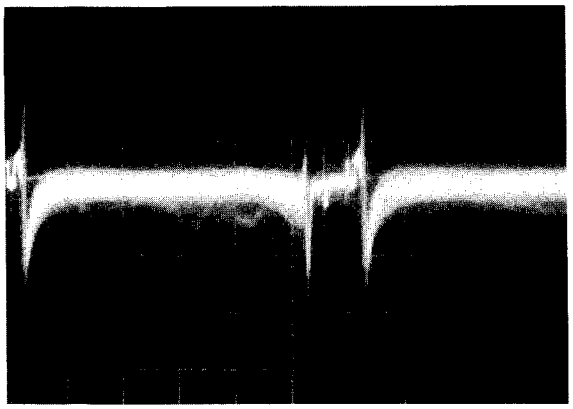

100mV 10μsec
H. rate

Fig. 25 Waveform of TP311

6. Check the color TV monitor for green tinting in the corners and at the sides. In most cases, the green tinting will be eliminated by these adjustments.
7. If, however, there is still some green tinting present, fine-adjust the alignment rings on the special tube until the green tinting is completely eliminated.
8. After fine-adjusting the alignment rings, it will be necessary to readjust the horizontal centering. Refer to step (12), the horizontal centering adjustment procedure.
9. Now, confirm that the horizontal linearity and size adjustments performed earlier have not shifted.
10. Also confirm that the vertical size adjustment has not shifted.

(15) COLOR SHADING ADJUSTMENT

| TP | Adj. | Chart | Test Instrument | Scope Trigger |
|---|---|---|---|---|
| TP311 R-Y Signal | VR617,VR618 VR619,VR620 | White | Scope Color Monitor | TP608 HSS |
| TP312 B-Y Signal | VR613,VR614 VR615,VR616 | | | |

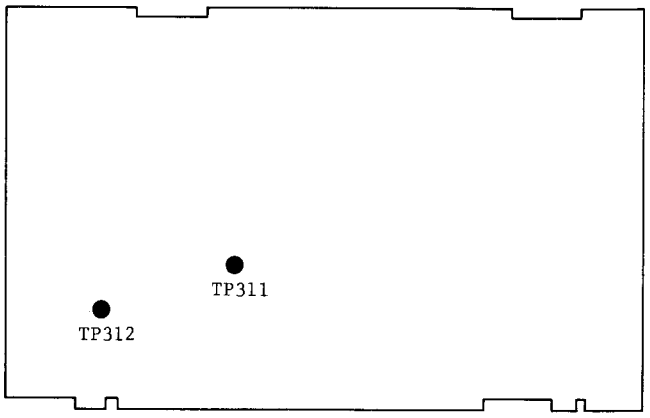


Process C.B.A.

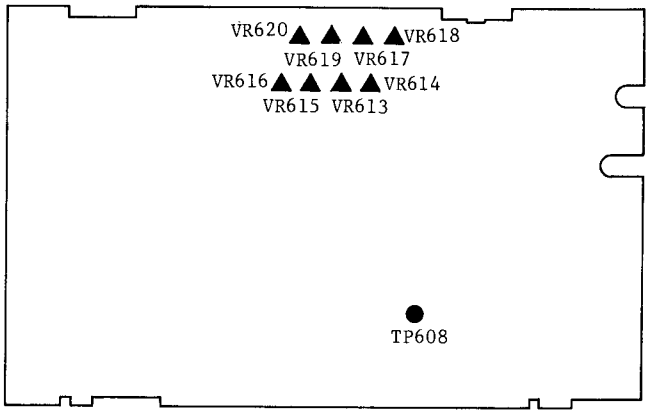


Deflection C.B.A.

1. Aim the camera at a white chart of a light box.
   If a reflection chart is used, a light intensity of about 4,000 lux will be required.
   Next, confirm that the color control knob set the center position.
2. Connect the oscilloscope to test point TP311 and observe the R-Y signal at the horizontal rate.
   Trigger the oscilloscope with test point TP608.
3. Alternately adjust VR619 and VR620 so that the signal level is minimized as shown in Fig. 26.

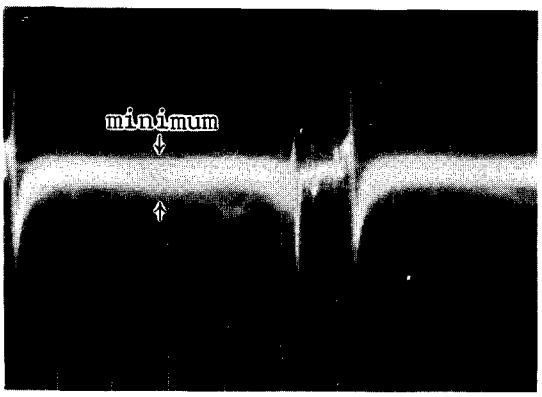


100mV 10μsec
V. rate

Fig. 26 Waveform of TP311

4. Then, alternately adjust VR617 and VR618 for the signal waveform to be flatest during horizontal period as shown in Fig. 27.

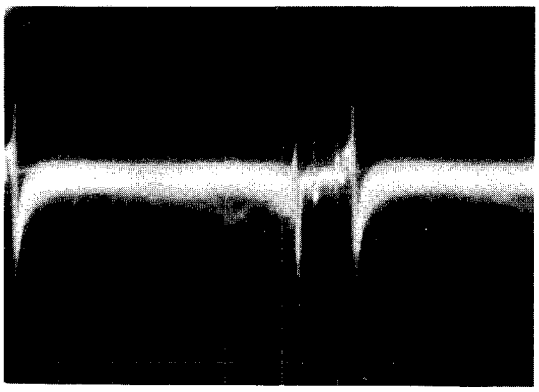

100mV 10μsec
H. rate

Fig. 27 Waveform of TP311

6. Now connect the oscilloscope to test point TP312 and observe the B-Y signal at the horizontal rate.
   Trigger the oscilloscope with test point TP608.
7. Alternately adjust VR615 and VR616 so that the signal level is minimized as shown in Fig. 28.

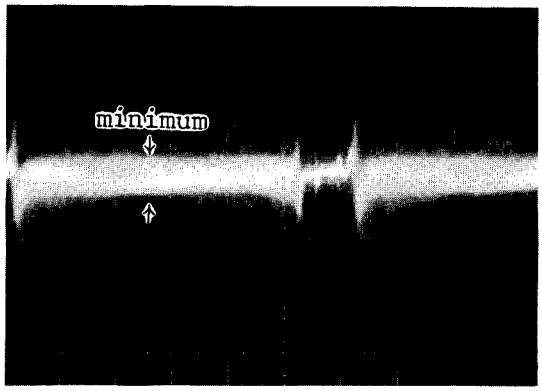


100mV 10μsec
V. rate

Fig. 28 Waveform of TP312

8. Then, alternately adjust VR613 and VR614 for the signal waveform to be flatest during horizontal period as shown in Fig. 29.

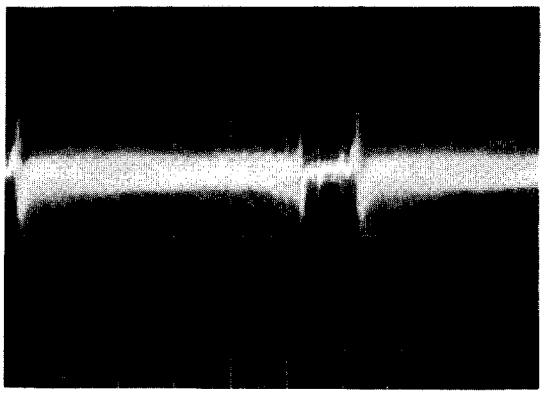

100mV 10μsec

Fig. 29 Waveform of TP312

[3] PROCESS CIRCUIT ADJUSTMENT

## ADJUSTMENT FLOW CHART FOR PROCESS CIRCUIT

(1) Color Gamma Circuit Release
↓
(2) Vertical Edge Balance Adjustment
↓
(3) Carrier Balance Adjustment
↓
(4) Red/Blue Signal Separation Adjustment
↓
(5) R and B Gain, Gamma Reference Voltage Adjustment
↓
(6) R and B Gamma Adjustment
↓
(7) White Balance Fine Adjustment
↓
(8) AWC (Automatic White Balance Control) Adjustment
↓
(9) High Luminance Chroma Clip Adjustment
↓
(10) Confirmation of The NTSC Pedestal Adjustment
↓
(11) Vertical Edge Gain Adjustment
↓
(12) Color Signal Adjustment
↓
(13) Confirmation of Resolution

Preparation:

The process circuit requires several preadjustments before any actual adjustments can be made.

1. Set the color control knob to the center, or detent position.
2. Next, set the iris control switch to the auto position.
3. Set the color temperature correction switch to the indoor position (mark: lamp).
4. Set the negative / positive reverse switch to the positive side.
5. Finally, set the standby switch to the operate position.

A test pattern light box will be required for several of the adjustment procedures. Be sure that the AC voltage (115∿125V) for the light box is correct and that you are using the correct pattern for each procedure.
If the reflection chart is used, the following light condition is required.

Color Temperature: 3200°K
Light Intensity: 1400 ∿ 2000 lux (on the chart surface)
Make sure that the correct pattern is used for each step.

(1) COLOR GAMMA CIRCUIT RELEASE

Turn VR307 fully counterclockwise and turn VR310, 311, 312, 313, 314, 315, 316 and VR317 to the center position as shown in Fig. 30.

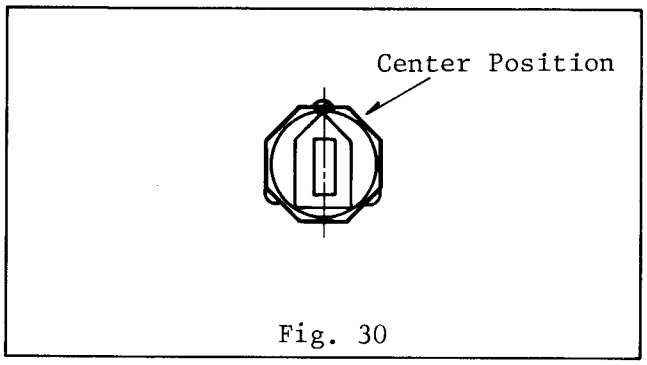


Fig. 30

Note: Adjust each potentiometer from the component side of circuit board.

(2) VERTICAL EDGE BALANCE ADJUSTMENT

| TP | Adj. | Chart | Test Instrument | Scope Trigger |
|---|---|---|---|---|
| TP309 YL Signal TP310 V-Edge Correction Signal | VR325 Bias Control VR326 V-Edge Gain VR327 V-Edge Bal. | Gray Scale | Scope | TP608 HSS TP607 VSS |

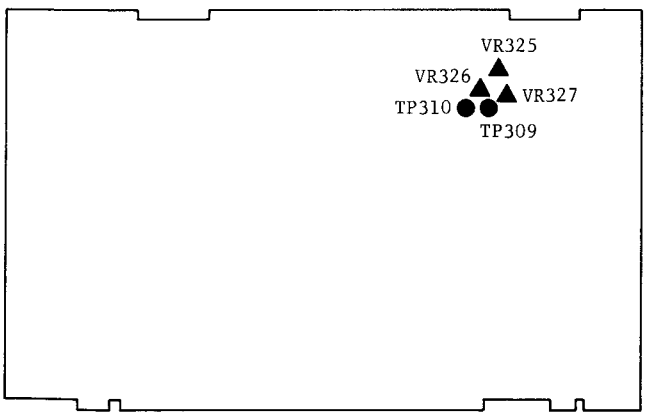


Process C.B.A.

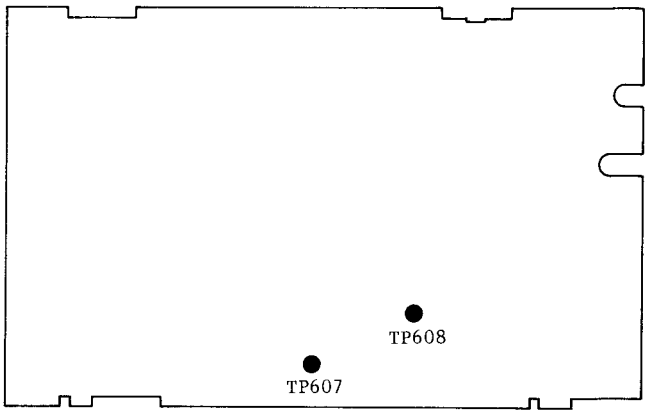


Deflection C.B.A.

1. Aim the camera at the gray scale chart.
2. Connect the oscilloscope to test point TP309 and observe the signal at H rate.
   Trigger the oscilloscope with test point TP608.
3. Adjust the bias control, VR325, so that the YL signal is maximized.
4. Then, connect the oscilloscope to test point TP310 and observe the vertical edge correction signal at V. rate.
   Trigger the oscilloscope with test point TP607.
5. Adjust the vertical edge balance control VR327 so that the vertical edge correction signal is minimized, as shown in Fig. 31.
6. Finally, turn the vertical edge gain control, VR326, fully clockwise the component side of the circuit board.

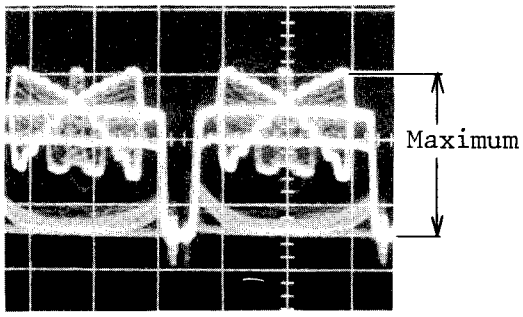


Fig. 31-(A)

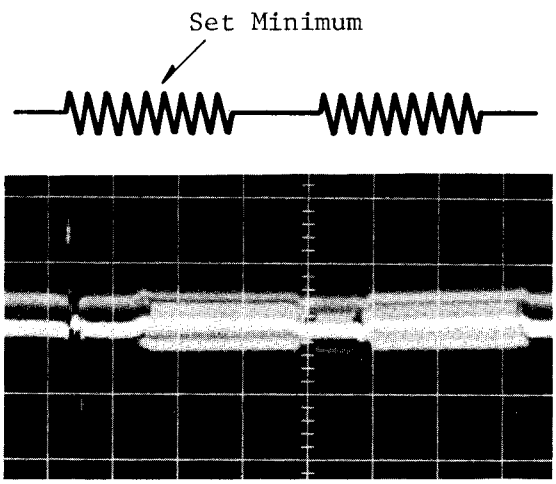


No Good 20mV 2msec

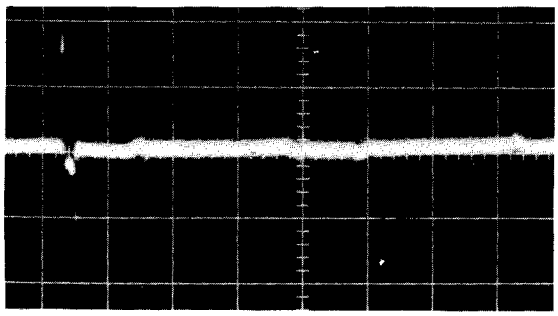

Good 20mV 2msec

Fig. 31-(B) Vertical Edge Correction Signal at TP310

(3) CARRIER BALANCE ADJUSTMENT

| TP | Adj. | Chart | Test Instrument | Scope Trigger |
|---|---|---|---|---|
| P306-Pin ① NTSC Signal | VR323 VR324 | / | Scope | TP608 HSS |

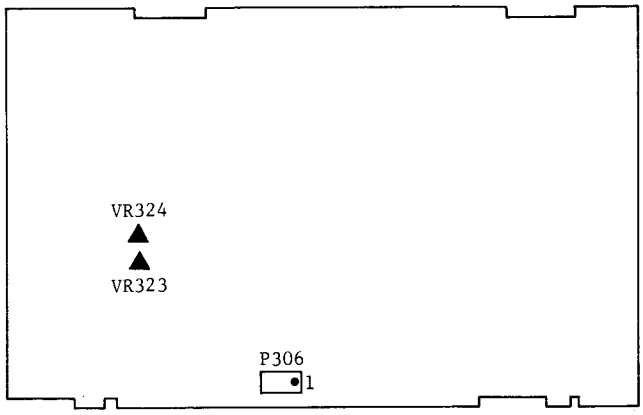


Process C.B.A.

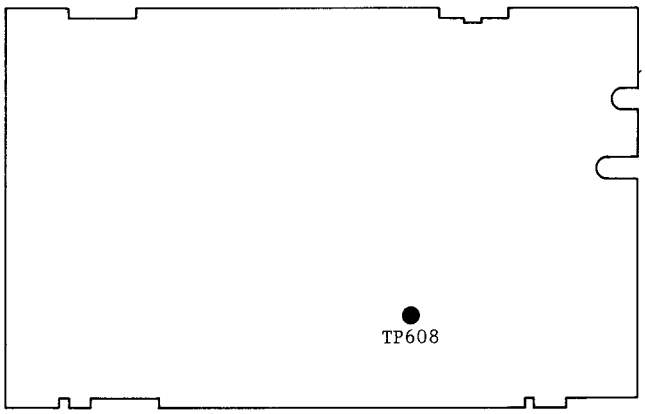


Deflection C.B.A.

1. Set the iris control switch to manual and close the iris.
2. Connect the oscilloscope to the connector, P306-pin (1) and observe the NTSC signal at H. rate. Trigger the oscilloscope with test point TP608.
3. Alternately adjust the carrier balance control, VR323 and VR324 until the carrier leakage is minimized.
4. Set iris control to "Auto".

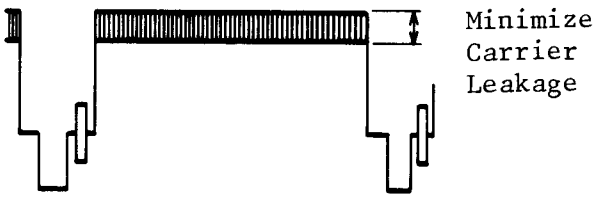


Fig. 32 NTSC Signal

(4) RED/BLUE SIGNAL SEPARATION ADJUSTMENT

| TP | Adj. | Chart | Test Instrument | Scope Trigger |
|---|---|---|---|---|
| TP304 Blue Signal | VR309 VR330 | Gray Scale | Scope | TP608 HSS |

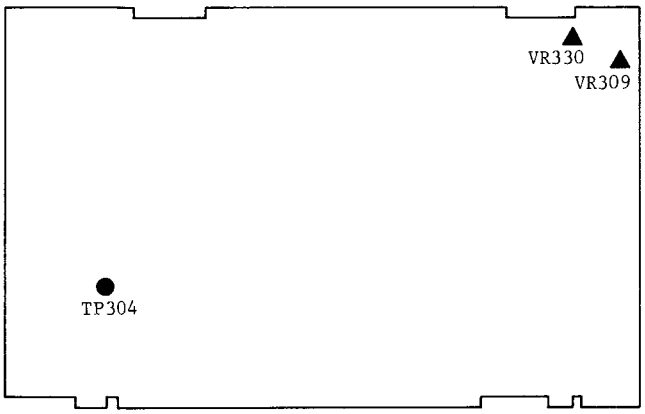


Process C.B.A.

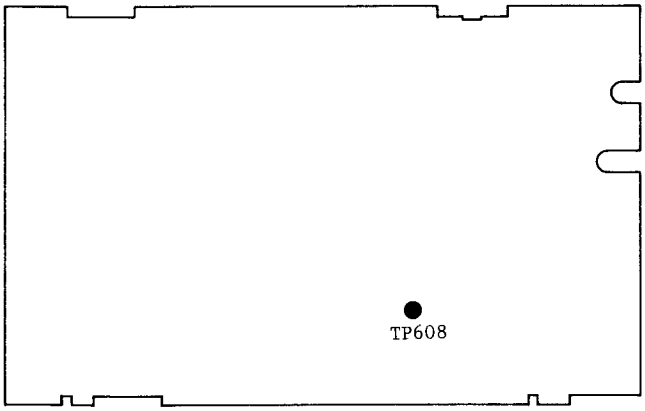


Deflection C.B.A.

1. Set iris control to "Auto".
2. Aim the camera at the gray scale chart.
3. Connect the oscilloscope to test point TP304 and observe the blue signal.
4. Alternately adjust the two red & blue separation controls, VR309 and VR330 to minimize the flicker.

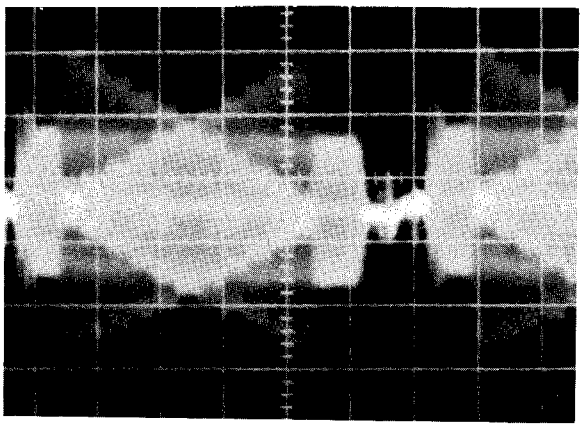

Fig. 33 Blue Signal

If the blue signal from test point TP304 has the red contamination, the waveform will be unstable and have changing amplitude.

(5) R AND B GAIN, GAMMA REFERENCE VOLTAGE ADJUSTMENT

| TP | Adj. | Chart | Test Instrument | Scope Trigger |
|---|---|---|---|---|
| Connector P306- Pin ① NTSC Signal TP306 | VR307 VR313 VR317 | Gray Scale | Scope | TP608 HSS |

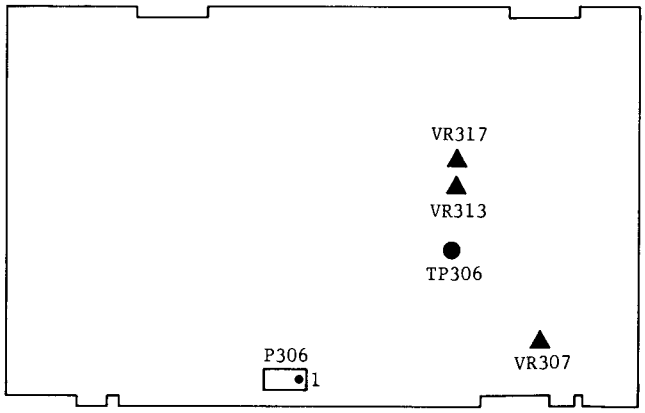


Process C.B.A.

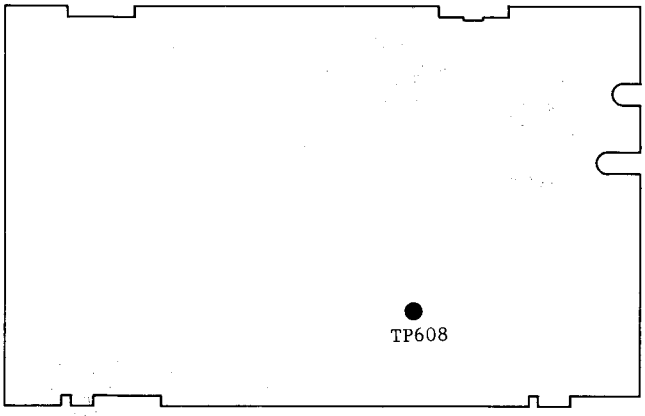


Deflection C.B.A.

Note: Before proceeding with this adjustment , preset the following camera controls.

a. Set the color control knob to the center, or detent position.
b. Set the iris control switch to the auto position.
c. Set the color temperature correction switch to the indoor position (lamp side).
d. Turn the power off and wait 5 seconds, to release the automatic white balance control (AWB). Then, turn the power on and confirm the AWB indicator (on EVF) glows red.

1. Aim the camera at the gray scale chart.
2. Connect the oscilloscope to the test point TP306 and observe the signal at H. rate.
   Trigger the oscilloscope with test point TP608.
3. Adjust the gamma reference voltage control, VR307, so that the signal is clipped at the six step from the bottom as shown in Fig. 34.

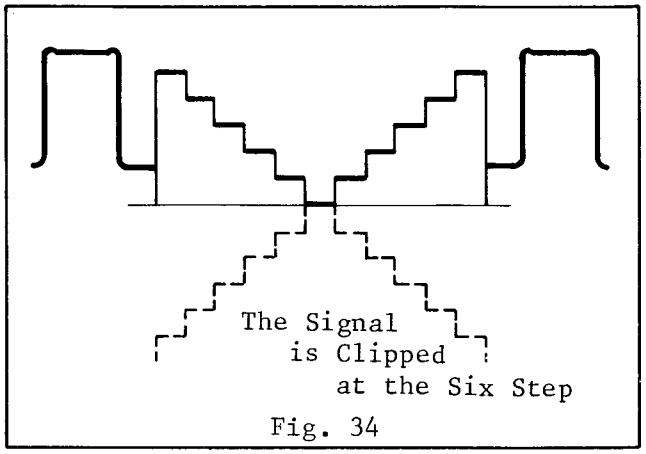


Fig. 34

4. Then, connect the oscilloscope to the connector P306-pin (1) and observe the NTSC signal at H. rate.
   Trigger the oscilloscope with test point TP608.
5. Alternately adjust the red gain control VR313, and the blue gain control VR317, to minimize the carrier leakage at the fourth step through the eighth step from the bottom.

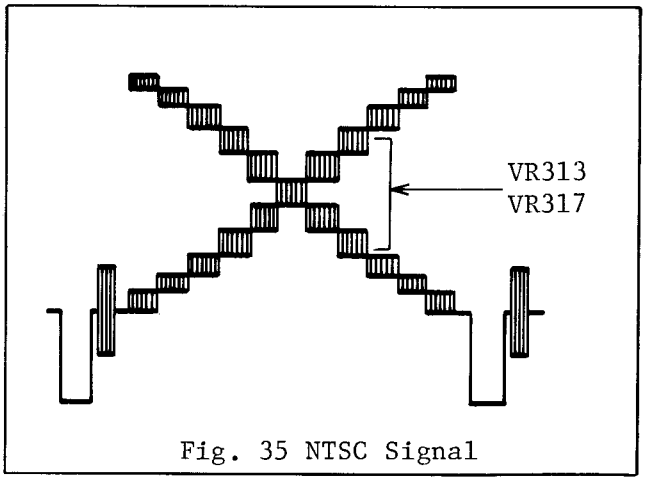


Fig. 35 NTSC Signal

(6) R AND B GAMMA ADJUSTMENT

| TP | Adj. | Chart | Test Instrument | Scope Trigger |
|---|---|---|---|---|
| Connector P306-Pin ① NTSC Signal | VR312 R Gamma 1<br>VR316 B Gamma 1<br>VR311 R Gamma 2<br>VR315 B Gamma 2<br>VR310 R Gamma 3<br>VR314 B Gamma 3 | Gray Scale | Scope | TP608 HSS |

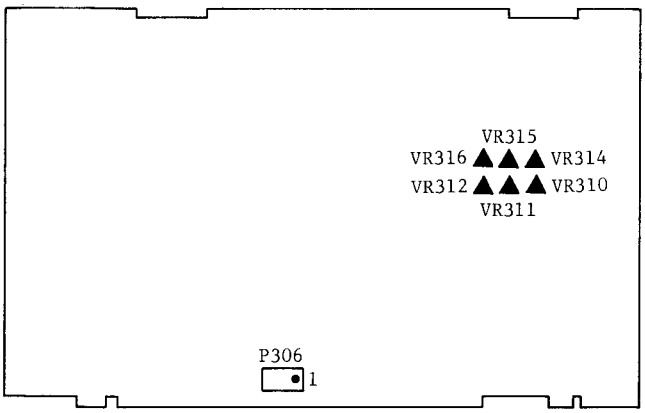


Process C.B.A.

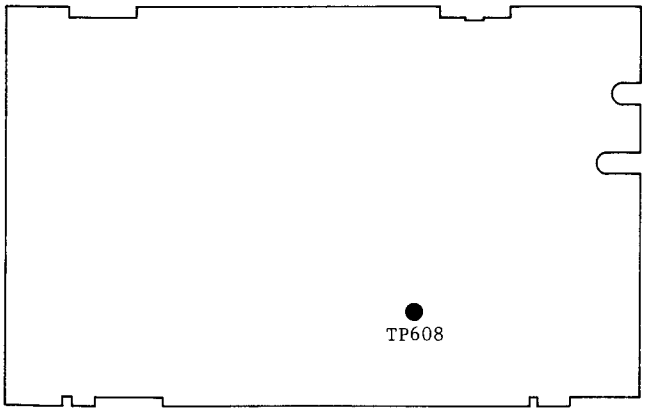


Deflection C.B.A.

1. Aim the camera at the gray scale chart.
2. Connect the oscilloscope to the connector P306-pin (1) and observe the NTSC signal at H. rate. Trigger the oscilloscope with test point TP608.
3. Adjust Red Gamma 1 Control, VR312 and Blue Gamma 1 Control, VR316, until the carrier leakage from the bottom through third steps is minimized.
4. Alternately adjust the red gain control VR313, and the blue gain control VR317, to minimize the carrier leakage at the fourth step through the eighth step from the bottom.
5. Adjust Red Gamma 2 Control VR311 and Blue Gamma 2 Control VR315 until the carrier leakage from third through fifth step from the top is minimized.
6. Zoom the lens out so that the black edge of the chart is visible in the picture. This increases the chart luminance which makes adjustment easier.
7. Then, adjust Red Gamma 3 Control VR310 and Blue Gamma 3 Control VR314, until the carrier leakage from the first through third step from the top is minimized.

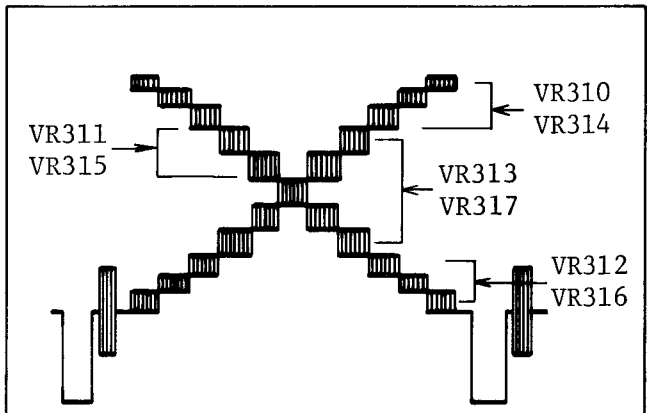


Fig. 36 NTSC Waveform

It is normal to have some residual carrier leakage, particularly at the top steps of the waveform. How much is normal depends on the characteristic of the special tube.

(7) WHITE BALANCE FINE ADJUSTMENT

Repeat (5) R and B gain adjustment and (6) R and B gamma adjustment.

(8) AWB (AUTOMATIC WHITE BALANCE CONTROL) ADJUSTMENT

| TP | Adj. | Chart | Test Instrument | Scope Trigger |
|---|---|---|---|---|
| TP313 B-Y Comparator Signal | VR329 | Gray Scale | Scope | TP607 VSS |
| TP314 R-Y Comparator Signal | VR328 | | | |

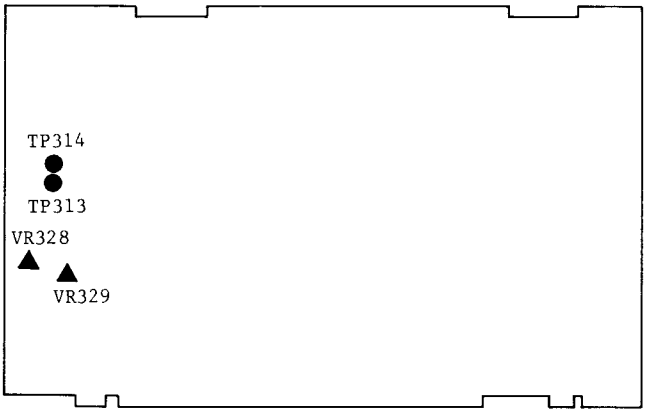


Process C.B.A.

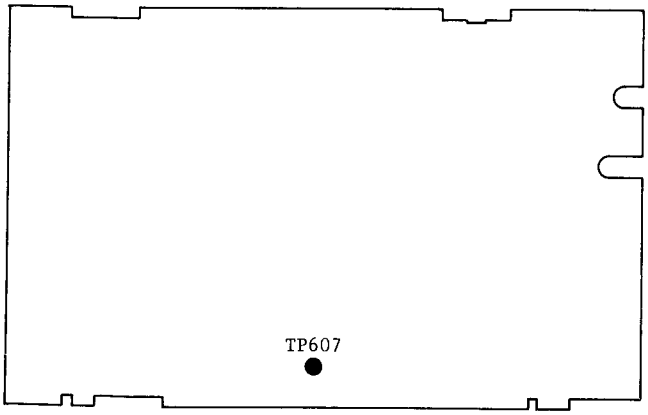


Deflection C.B.A.

1. Turn the power off and wait 5 seconds for the automatic white balance control (AWB) to be released, then turn the power back on.
2. Confirm that the automatic white balance control indicator glows red.
3. Aim the camera at the gray scale chart.
4. See if the color balance is correct by checking for color in the picture. The color balance is correct if there is no color in the picture.
5. Now connect the oscilloscope to test point TP313 and observe the waveform at the vertical rate. Trigger the oscilloscope with test point TP607.
6. Place the oscilloscope in the DC mode.
7. Adjust Automatic White Balance Control VR329 so that the signal looks like as shown below.

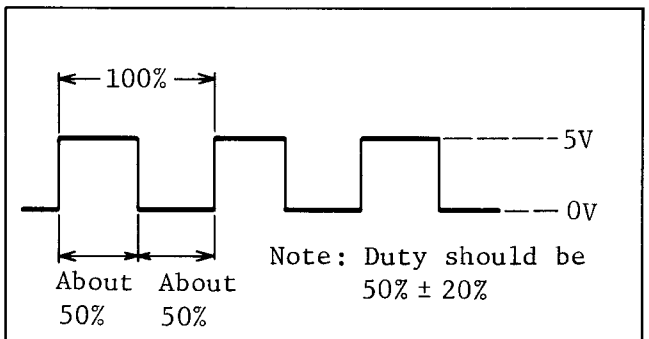


Fig. 37

8. Connect the oscilloscope to test point TP314 and observe the waveform at the vertical rate.
9. Adjust Automatic White Balance Control VR328 in the same manner.
10. Aim the camera at the white chart and confirm that the white balance is correct when the automatic white balance control switch is pushed ON.

(9) HIGH LUMINANCE CHROMA CLIP ADJUSTMENT

| TP | Adj. | Chart | Test Instrument | Scope Trigger |
|---|---|---|---|---|
| / | VR318 H.C. Gain | Gray Scale | Monitor | / |

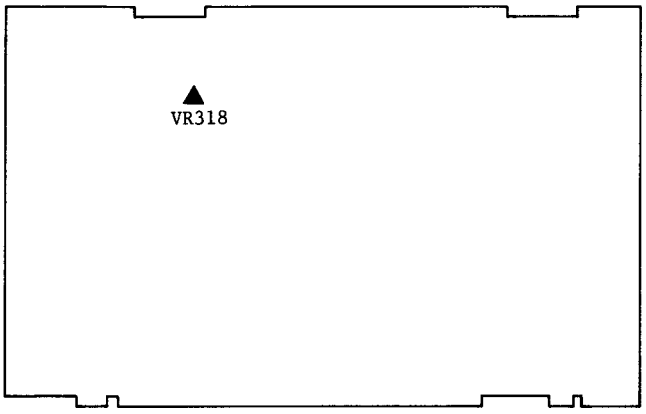


Process C.B.A.

1. Aim the camera at the gray scale chart and observe the picture on the TV monitor.
2. Next, zoom out to 12 mm and check the high luminance part of the scale, from the whitest step to the fourth step from the white.
   The picture should be whitish-gray.
3. If however, the picture has a green or yellow cast, adjust the High Luminance Chroma Clip Gain Control VR318, until the cast is eliminated and the picture a normal whitish-gray.

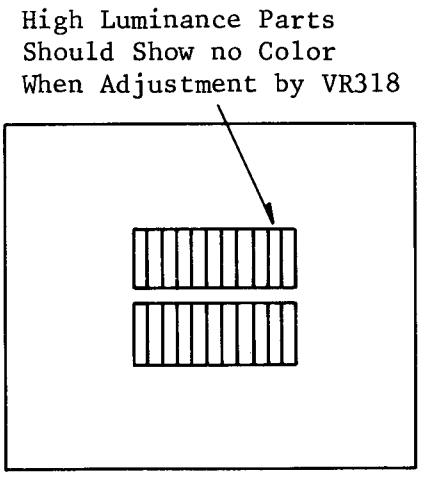


Fig. 38

(10) CONFIRMATION OF THE NTSC PEDESTAL ADJUSTMENT

Check NTSC pedestal adjustment and NTSC signal level adjustment, step (4) (see deflection circuit adjustment flow chart), and adjust it if necessary.
If the adjustment is correct, go on to the next step.

(11) VERTICAL EDGE GAIN ADJUSTMENT

| TP | Adj. | Chart | Test Instrument | Scope Trigger |
|---|---|---|---|---|
| / | VR326 V. Edge Gain | Gray Scale | Monitor | / |

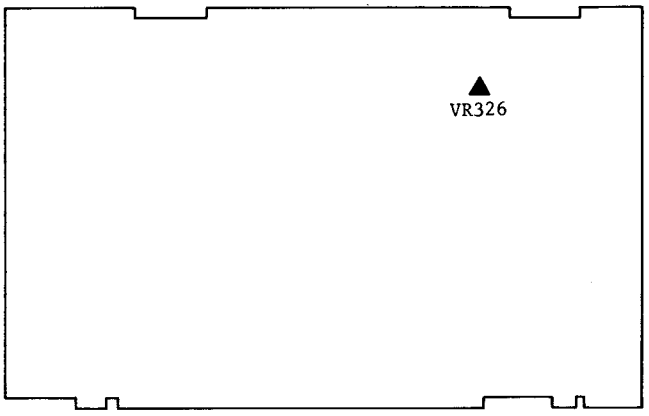


Process C.B.A.

1. Aim the camera at the gray scale chart.
2. Observe the picture on the monitor and adjust Vertical Edge Gain Control VR326 until the color fringing on the upper and lower edges of the gray scale is eliminated.

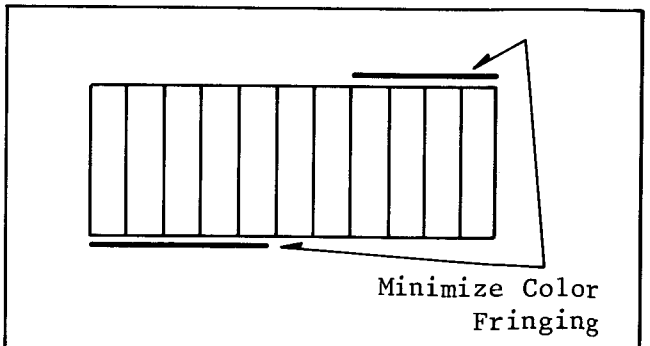


Fig. 39 Picture of Gray-Scale

(12) COLOR SIGNAL ADJUSTMENT

| TP | Adj. | Chart | Test Instrument | Scope Trigger |
|---|---|---|---|---|
| Connector P306-Pin ① NTSC Signal | VR320 Color Gain<br>VR319 R-Y Gain<br>VR321 BF Phase<br>C361 B-Y Phase<br>VR322 Negative BF Phase | Color Bar Chart | Vectorscope | / |

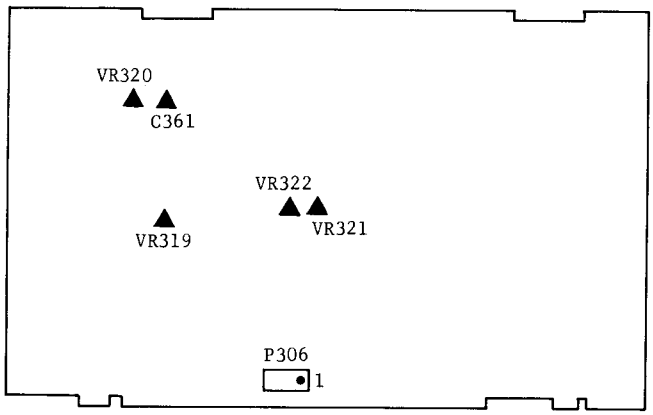


Process C.B.A.

Note: Before beginning this adjustment, check to see that the automatic white balance control indicator in the camera's electronic view-finder glows red. If doesn't, turn the power off for 5 seconds to release the automatic white balance control circuit, then turn it back on and proceed with the color signal adjustment procedure.

1. Aim the camera at the color bar chart.
2. Connect the vectorscope to the connector P306-pin (1).
3. Set the vectorscope to "Vector" mode and observe the color vector.
4. Adjust the color gain control VR320, so that the amplitude of the YL signal is 1.2 times the amplitude of the burst signal.
5. Adjust the R-Y gain control VR319, so that the amplitude of the red signal is 1.5 times the amplitude of the burst signal.
6. Adjust the burst flag phase control VR321, (BF Phase), so that the vector phase of the red signal is 104° ± 15°.
7. Adjust the B-Y phase control C361 so that the YL signal is 168° +10° -30°
8. Adjust the total amplitude and the total phase with VR320, VR319, VR321 and C361 to be within specification as shown in chart-1.
9. Turn the negative/positive reverse switch to the negative side, and adjust the negative BF phase control VR322, so that the vector phase of the red signal is 290°.

Specification:

1) Phase

| Signal | Vector Phase | Adj. |
|---|---|---|
| R | 104° ± 15° | VR321 |
| YL | 168° +10° -30° | C361 |
| R (Negative) | 290° | VR322 |

2) Amplitude

a. The amplitude of R signal is 1.5 times the burst signal.
b. The amplitude of YL signal is 1.2 times the burst signal.

Chart-1.

(13) CONFIRMATION OF RESOLUTION

1. Shoot the Resolution Chart. Frame it completely.
2. While viewing the Resolution Chart on the EVF confirm that the horizontal resolution is approximately 270 lines.

[4] ELECTRONIC VIEWFINDER CIRCUIT

Preparation:

Connect the viewfinder connector to the EVF connector on the camera head.

(1) HORIZONTAL FREQUENCY ADJUSTMENT

1. Turn the power switch on.
2. Aim the camera at the test pattern.
3. Short the base and emitter of Q903 using a jumper.
4. Adjust L905 for stable horizontal scanning.
5. Remove the jumper connected between base and emitter of Q903.
6. If the horizontal picture center is improperly positioned, adjust the center ring on the deflection coil assembly.
7. If the brightness is incorrect, adjust VR904 (brightness).

(2) Vertical Height

1. Aim the camera at the registration chart.
2. Adjust VR902 so that the circle is just circle.

(3) Focus

1. Aim the camera at the registration chart.
2. If the focus on viewfinder is improper but the picture on the monitor is OK, adjust VR903.



# Location of Test Points and Controls

## Process C.B.A.

VEPW0107A

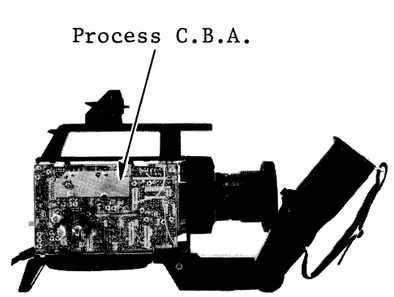


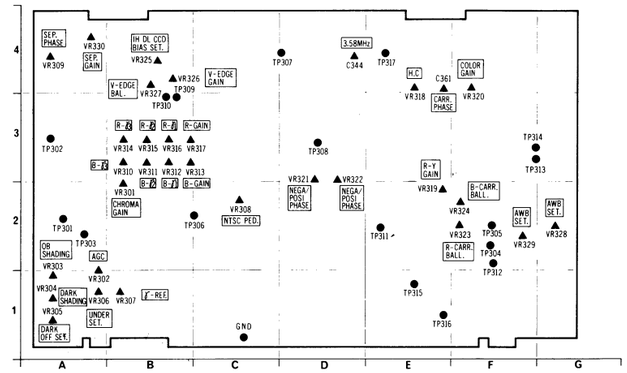


## Deflection C.B.A.

VEPW0108A

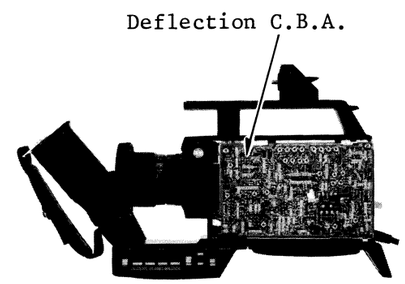


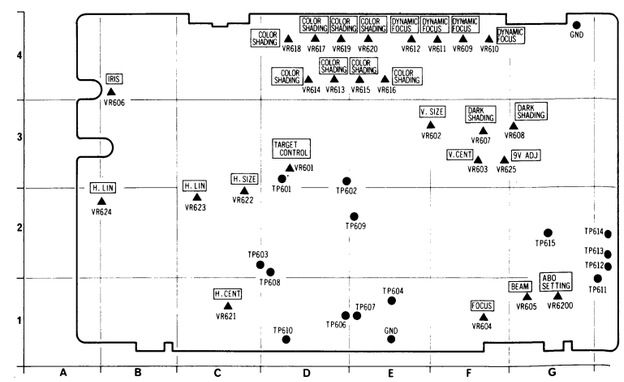

# COLOR CAMERA SERVICING FIXTURES

LIGHT BOX w/CHART SET VFKS002

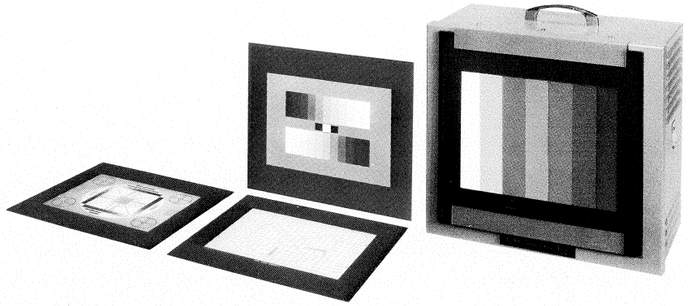

REFLECTION CHART SET VFKS003

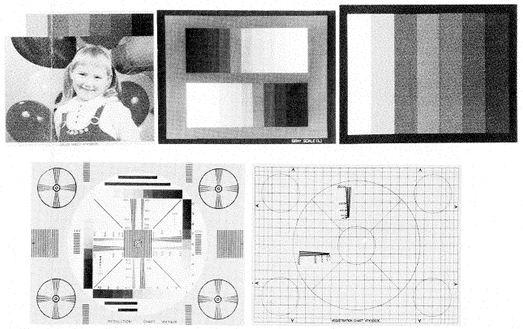

FM DETECTOR VFKS001

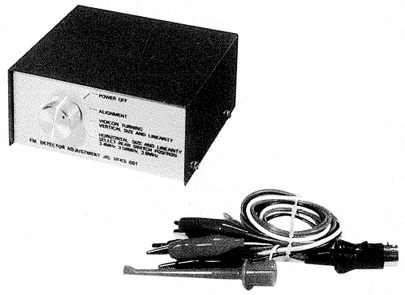

GRAY SCALE CHART VFKS002A

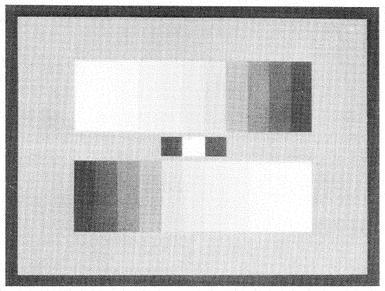

RESOLUTION CHART VFKS002D

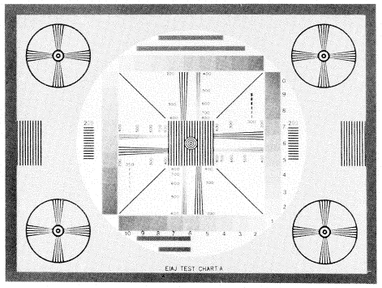

GRAY SCALE CHART VFKS003A

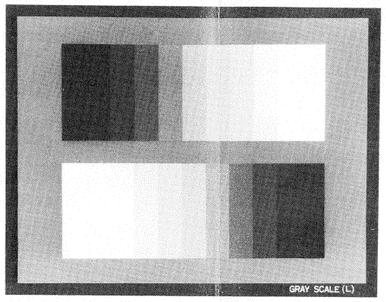

RESOLUTION CHART VFKS003D

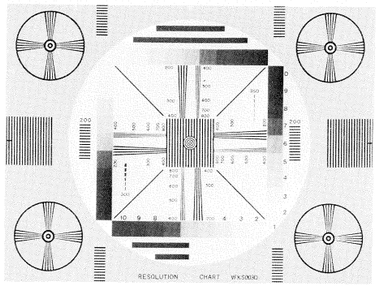

COLOR CHART VFKS002B

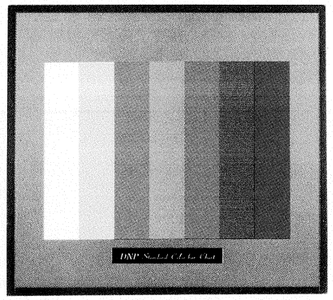

LIGHT BOX VFKS002Y

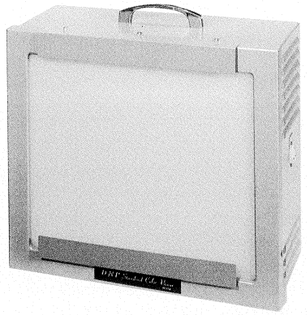

COLOR CHART VFKS003B

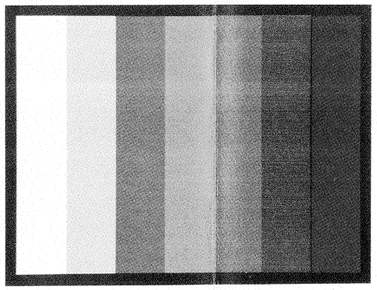

COLOR SHEET VFKS003E

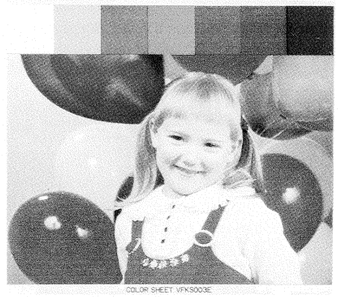

REGISTRATION CHART VFKS002C

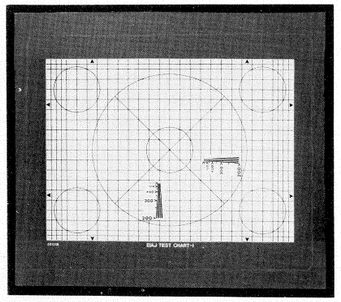

REGISTRATION CHART VFKS003C

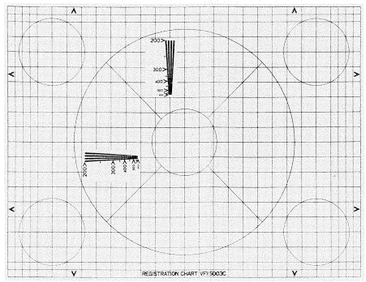

ORDER NO. VRD-8202-048

# Service Manual

Color Video Camera

# PK-802

**Vol. 3**

## *Block Diagrams*

### SPECIFICATIONS:

| | |
|---|---|
| Power Source: | DC 12V ± 10%<br>AC 120V ± 10%, 60Hz ± 0.5%<br>(with Power Supply Unit) |
| **Power Consumption:**<br>**(with E.V.F)** | DC 5.8W at 12V DC (Battery)<br>DC 1.2W at standby |
| **Special Tube System:** | 2/3″ frequency separation single tube system (built-in stripe filter) |
| Single Carrier Frequency: | 4.3MHz |
| Focus System: | Electro-static type |
| Lens Mounting: | Built-in zoom lens (not "C" mount) |
| Lens: | 6:1 zoom lens with auto/manual iris control.<br>Auto zoom lens and macro construction<br>F: 1.4, f: 12mm—72mm<br>d: 1.0m to infinity |
| Lens Diameter: | 49mm |
| Light Sensitivity: | Minimum light intensity on optical image: 40 Lux (F: 1.4)<br>Optimum light intensity on optical image: 900 Lux |
| Video Output Level: | 1.0Vp-p, 75Ω (M type coaxial connector)<br>(Standard NTSC signal) |
| Sync. System: | Internal Sync: RS-170 |
| Signal to Noise Ratio: | More than 45dB |
| Horizontal Resolution: | More than 270 lines |
| Color Temperature Control: | 2 step switch (indoor/outdoor) & auto adjust |
| Microphone: | Condenser Microphone |
| Audio Output Level: | −20dB, Hi-impedance |
| Audio Output Impedance: | High impedance (1KΩ) |
| External Microphone Input Impedance: | 600Ω unbalanced |
| Electronic Viewfinder: | Monochrome 1 inch CRT |
| Operating Temperature: | 5°C to 35°C |
| Operating Humidity: | 10% to 75% |
| Operating Position: | Normal position only |
| Weight: | Camera Head with E.V.F.<br>5.1 lbs (with lens, 7ft. cable & shoulder pad/handle grip)<br>AC adaptor (option)<br>2.4 lbs |
| Dimensions: | Camera Head with E.V.F.<br>8.3″(W) × 8.7″(H) × 11.2″(D)<br>208mm(W) × 218mm(H) × 282mm(D)<br>AC adaptor (option)<br>3″(W) × 3″(H) × 6″(D)<br>80mm(W) × 75mm(H) × 149mm(D) |

Weight and dimensions shown are approximate.
Specifications are subject to change without notice.

**Panasonic**

Panasonic Company
Division of Matsushita Electric
Corporation of America
One Panasonic Way, Secaucus,
New Jersey 07094

Panasonic Hawaii Inc.
91-238 Kauhi St. Ewa Beach
P.O. Box 774
Honolulu, Hawaii 96808-0774

Panasonic Canada
Division of Matsushita Electric
of Canada Limited
5770 Ambler Drive, Mississauga,
Ontario, L4W 2T3

Panasonic Sales Company,
Division of Matsushita Electric
of Puerto Rico, Inc.
Ave, 65 De Infanteria, KM 9.7
Victoria Industrial Park
Carolina, Puerto Rico 00630

# CONTENTS

OVERALL BLOCK DIAGRAM ..... 3-1
DEFLECTION BLOCK DIAGRAM ..... 3-2
PROCESS BLOCK DIAGRAM ..... 3-3
MICRO COMPUTER BLOCK DIAGRAM
(1) Serial Date/Clock Signal Path ..... 3-4
(2) Title & L.T Mode ..... 3-5
(3) INF Mode ..... 3-6
(4) Fade Mode ..... 3-7
CAMERA REMOTE CONTROL (H) BLOCK DIAGRAM ..... 3-8
CAMERA REMOTE CONTROL (M) BLOCK DIAGRAM ..... 3-8
CAMERA REMOTE CONTROL (S) BLOCK DIAGRAM ..... 3-9
ELECTRONIC VIEWFINDER BLOCK DIAGRAM ..... 3-10

# DEFLECTION BLOCK DIAGRAM

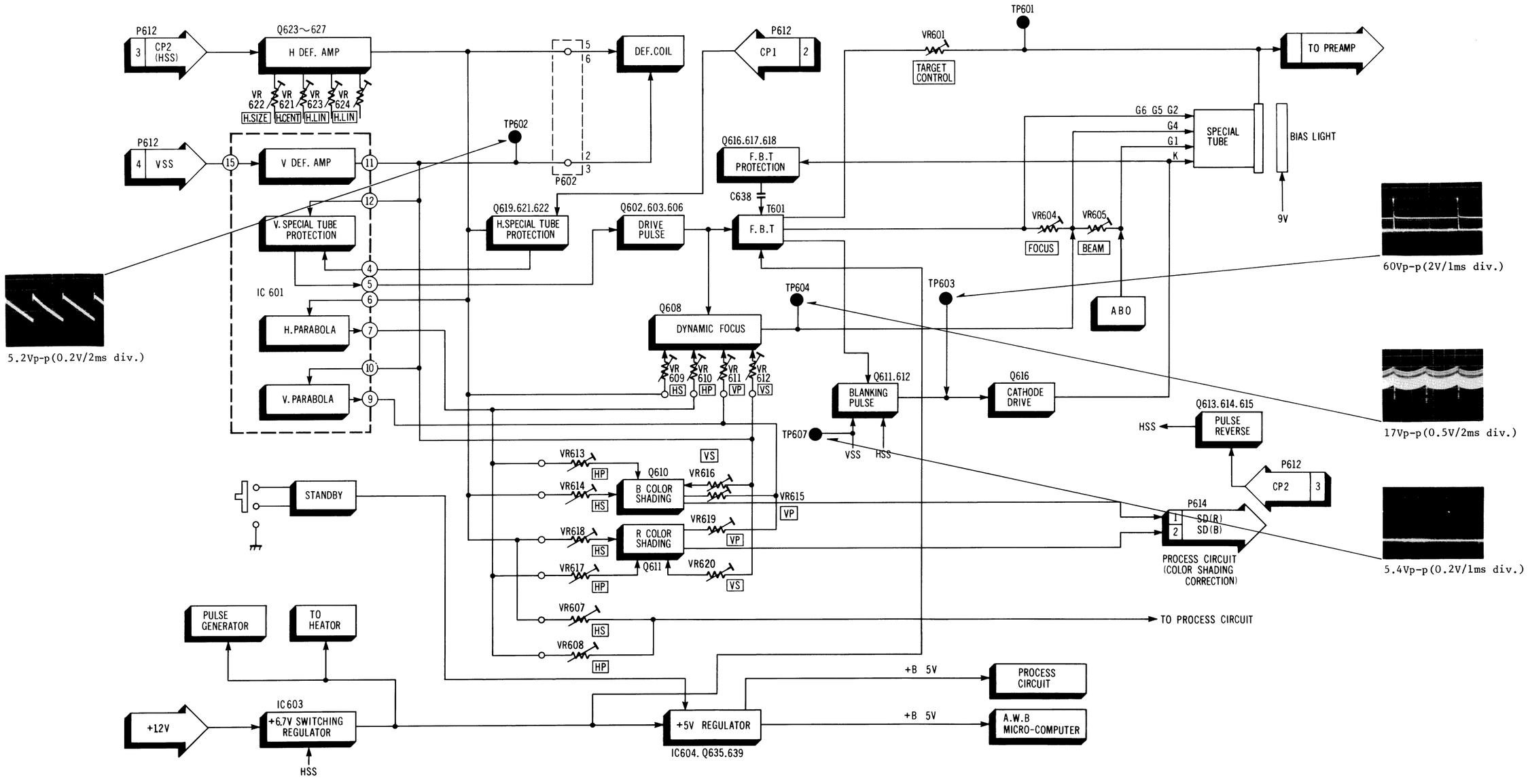

# OVERALL BLOCK DIAGRAM

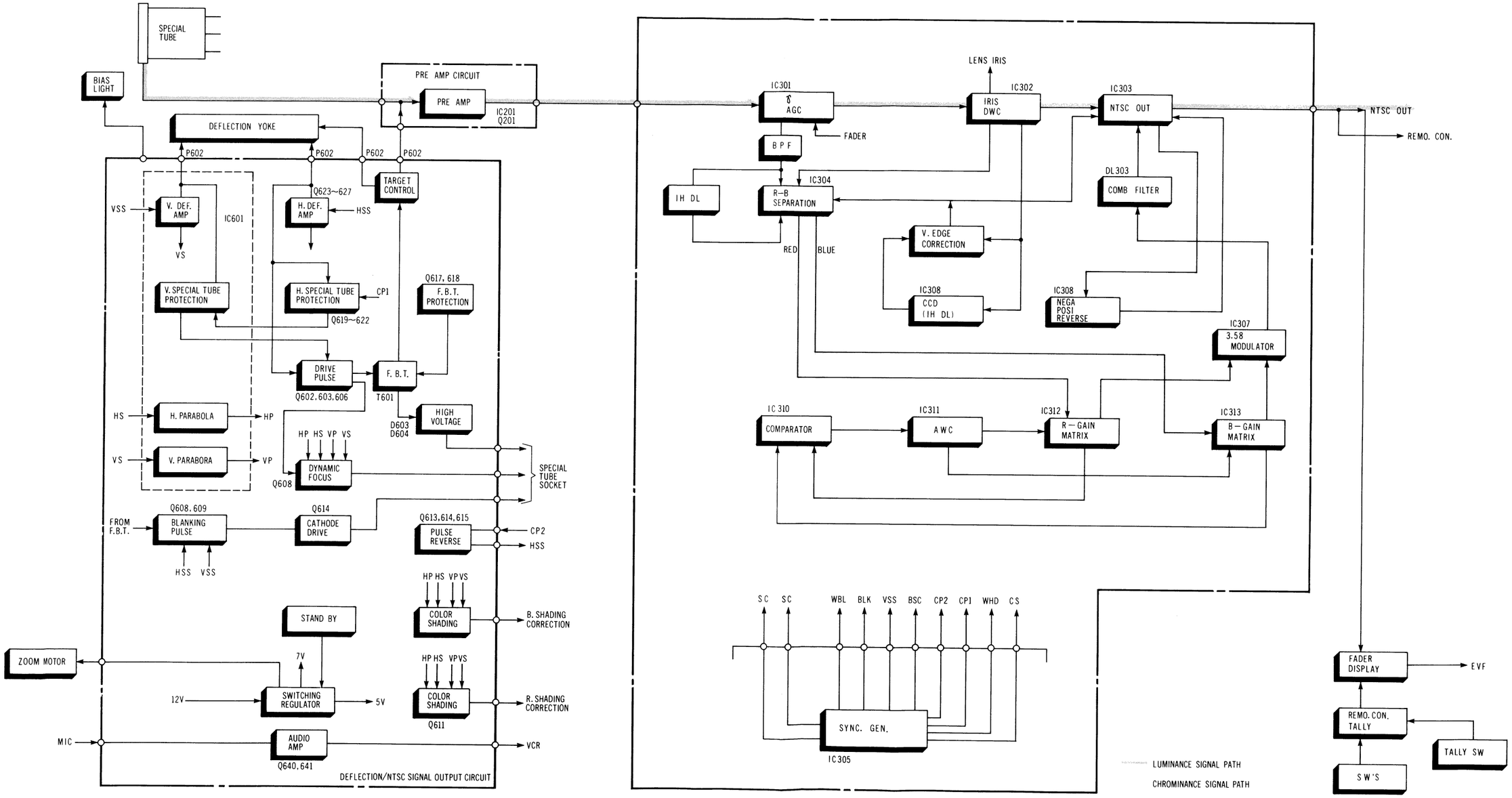

# PROCESS BLOCK DIAGRAM

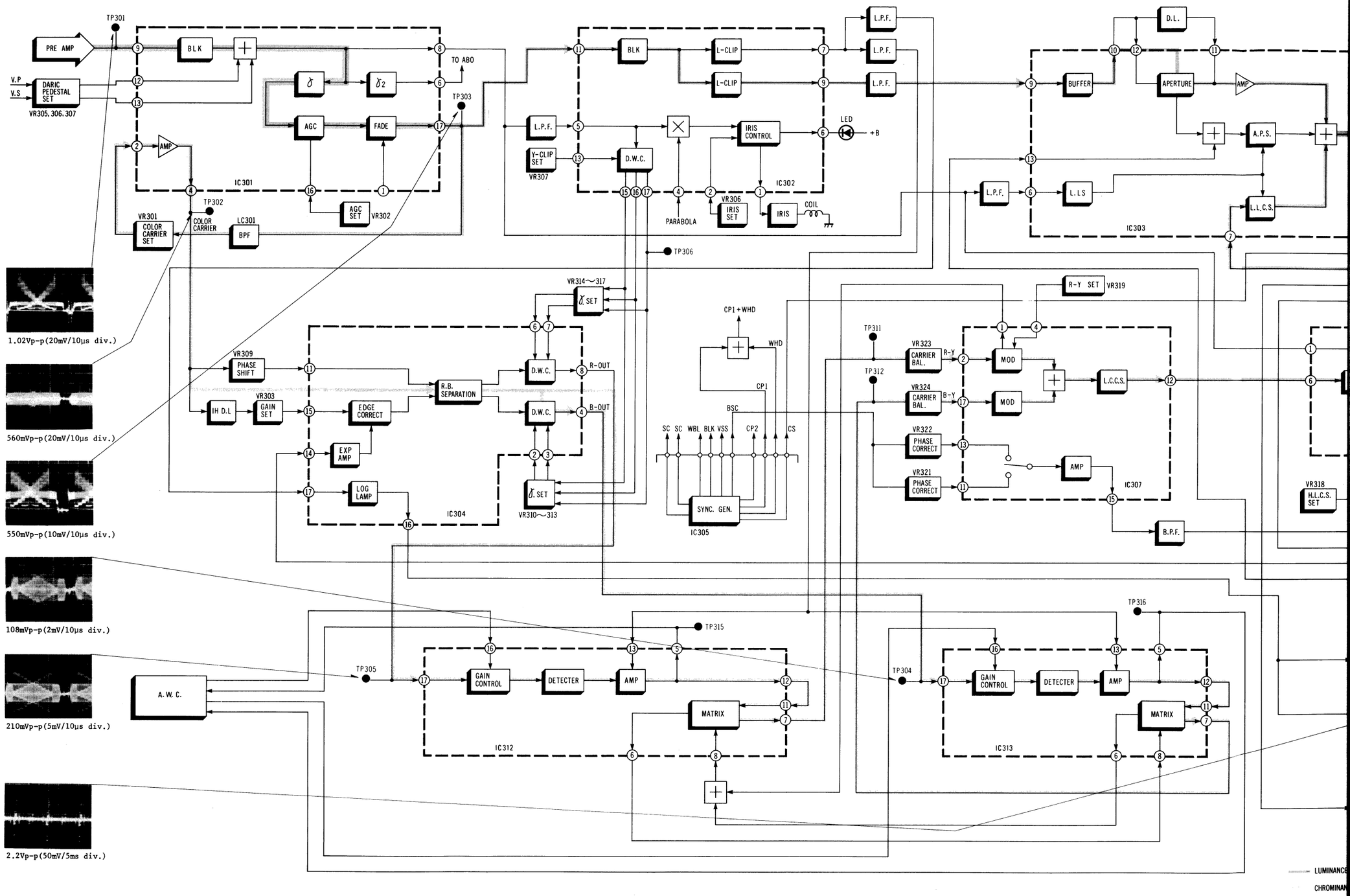

# AM

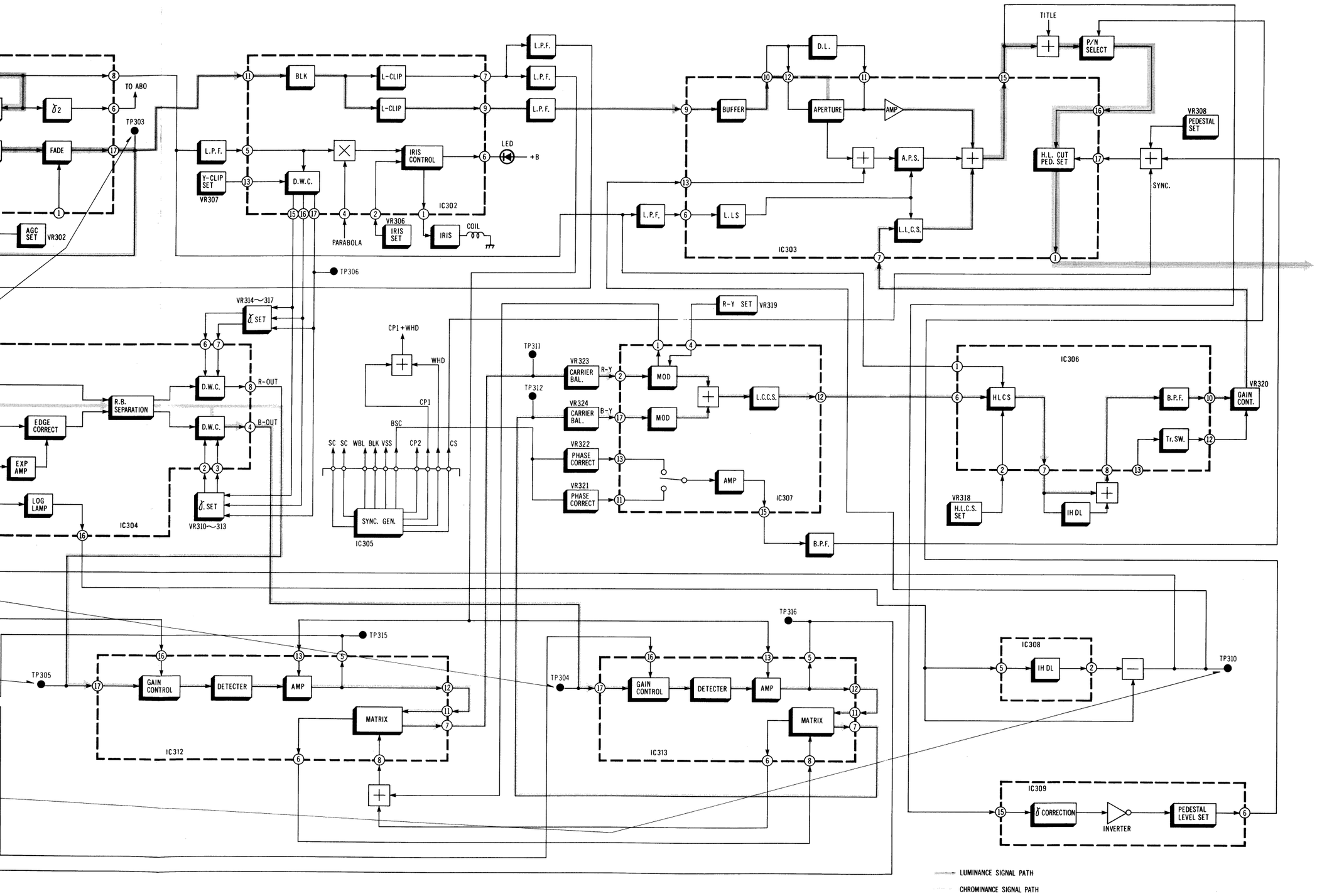
TO ABO
TP303
γ2
FADE
AGC SET
VR302
BLK
L-CLIP
L-CLIP
L.P.F.
L.P.F.
L.P.F.
L.P.F.
Y-CLIP SET
VR307
D.W.C.
IRIS CONTROL
LED
+B
IC302
PARABOLA
VR306
IRIS SET
IRIS
COIL
TP306
D.L.
BUFFER
APERTURE
AMP
A.P.S.
L.L.C.S.
L.L.S
IC303
TITLE
P/N SELECT
VR308
PEDESTAL SET
H.L. CUT PED. SET
SYNC.
VR314～317
γ SET
R-Y SET
VR319
CP1+WHD
WHD
CP1
BSC
TP311
TP312
VR323
CARRIER BAL.
R-Y
VR324
CARRIER BAL.
B-Y
VR322
PHASE CORRECT
VR321
PHASE CORRECT
MOD
MOD
L.C.C.S.
AMP
IC307
B.P.F.
IC306
HLCS
B.P.F.
Tr.SW.
GAIN CONT.
VR320
IH DL
VR318
H.L.C.S. SET
D.W.C.
R-OUT
D.W.C.
B-OUT
R.B. SEPARATION
EDGE CORRECT
EXP AMP
LOG LAMP
IC304
γ SET
VR310～313
SC SC WBL BLK VSS CP2 CS
SYNC. GEN.
IC305
TP305
TP315
GAIN CONTROL
DETECTER
AMP
MATRIX
IC312
TP304
TP316
GAIN CONTROL
DETECTER
AMP
MATRIX
IC313
IC308
IH DL
TP310
IC309
γ CORRECTION
INVERTER
PEDESTAL LEVEL SET
LUMINANCE SIGNAL PATH
CHROMINANCE SIGNAL PATH

# MICRO COMPUTER BLOCK DIAGRAM (SERIAL DATA/CLOCK SIGNAL PATH)

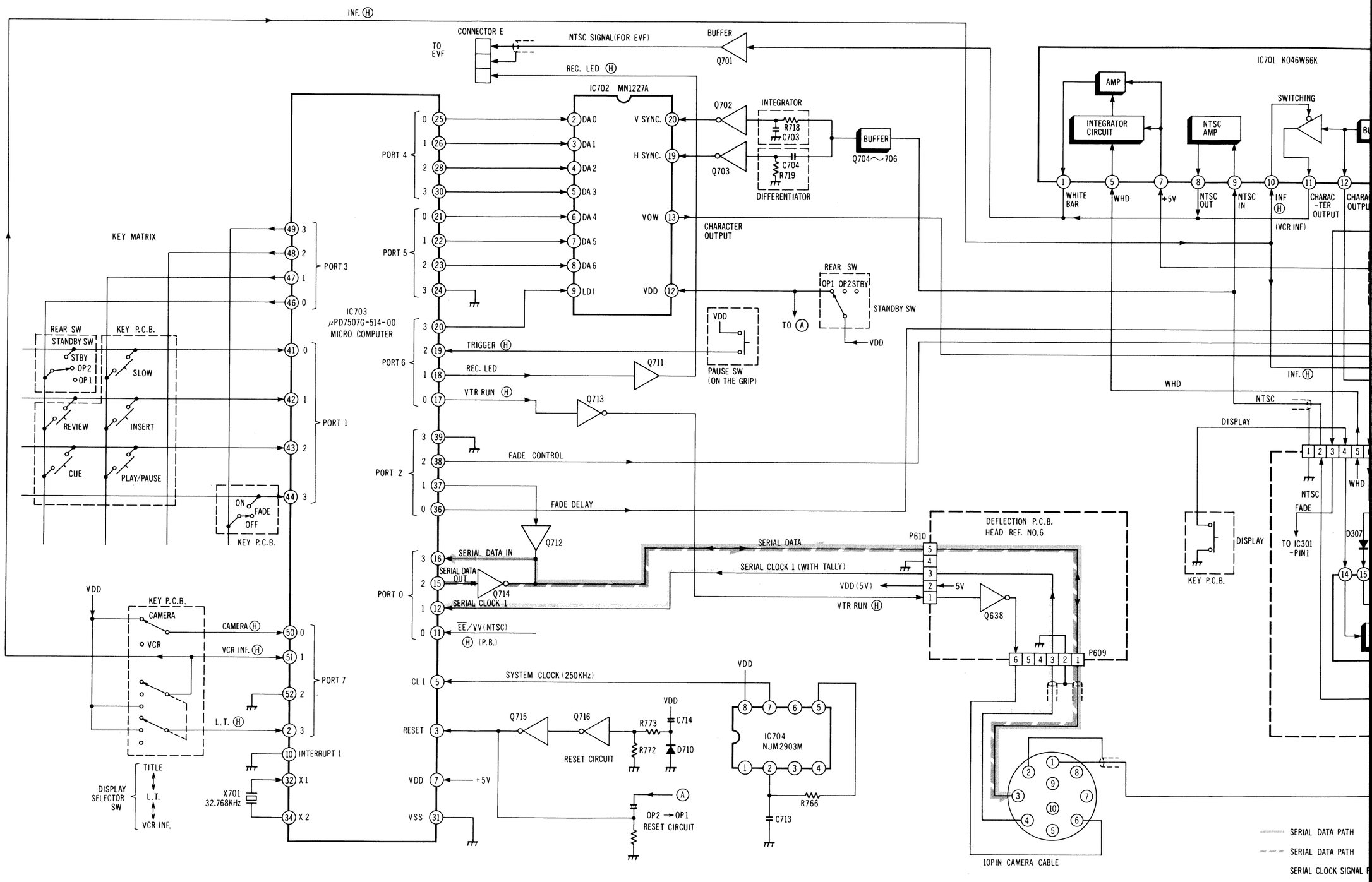

# DIAGRAM (SERIAL DATA/CLOCK SIGNAL PATH)

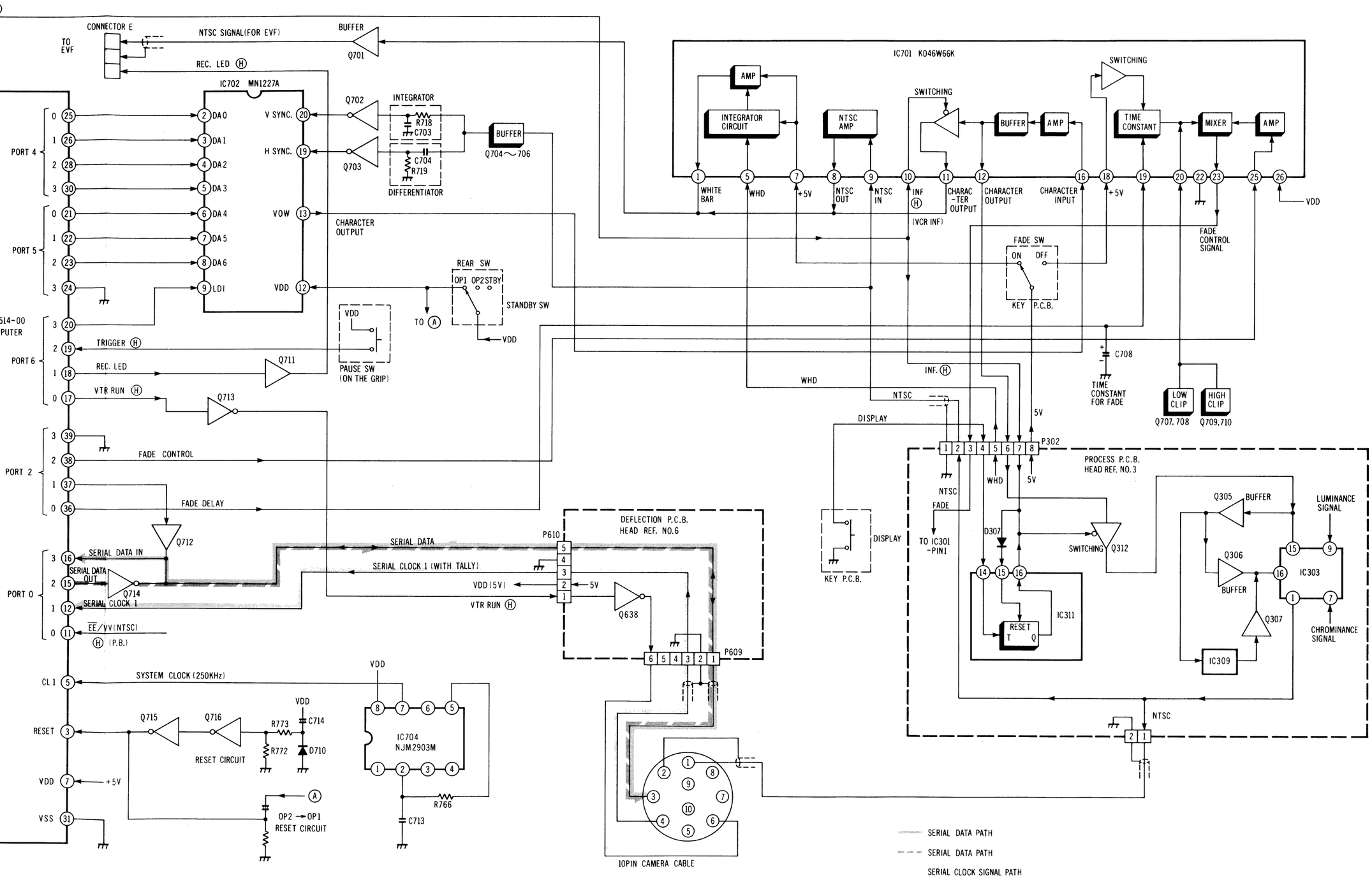

# MICRO COMPUTER BLOCK DIAGRAM (TITLE & L.T MODE)

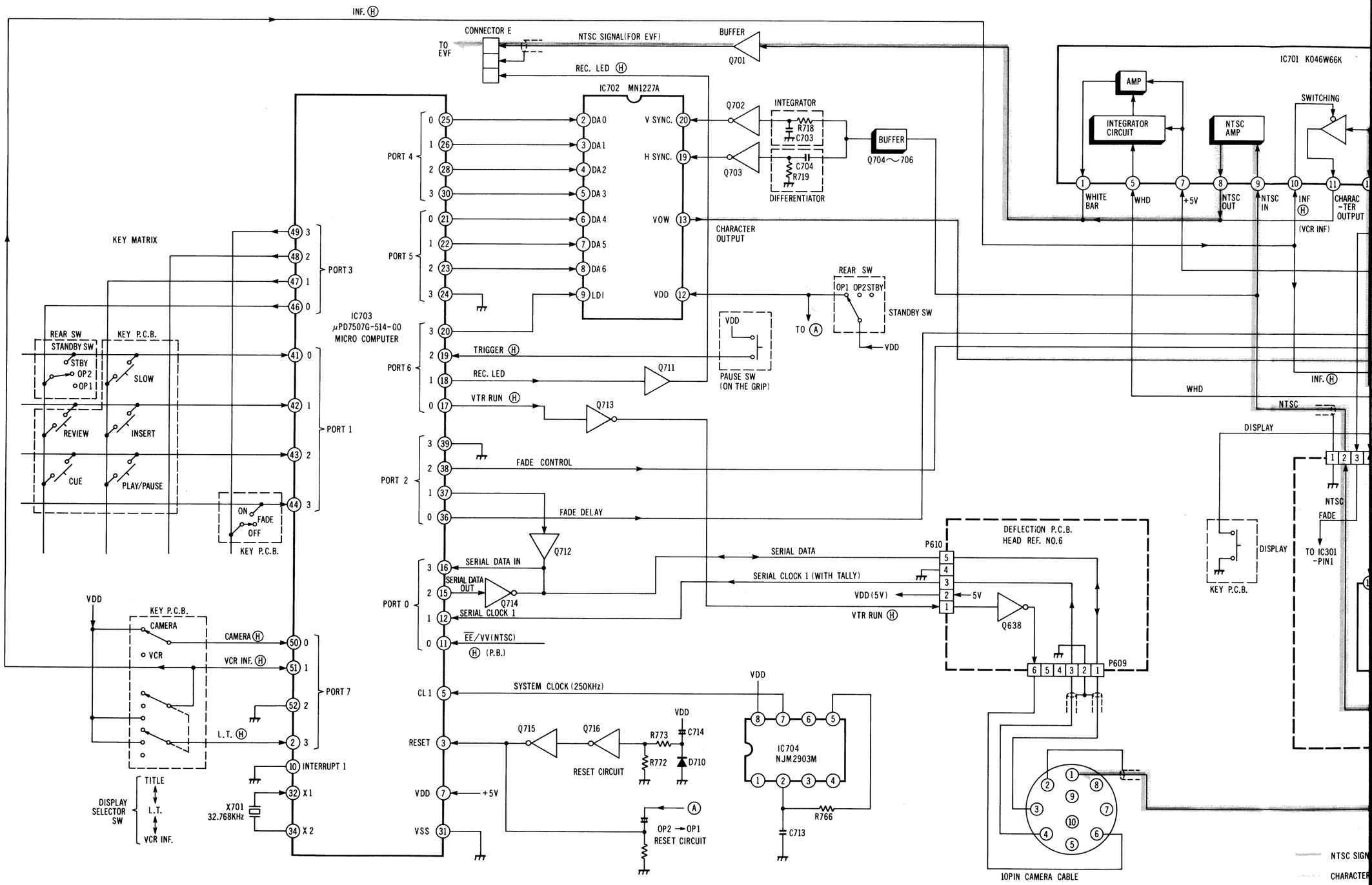

# DIAGRAM (TITLE & L.T MODE)

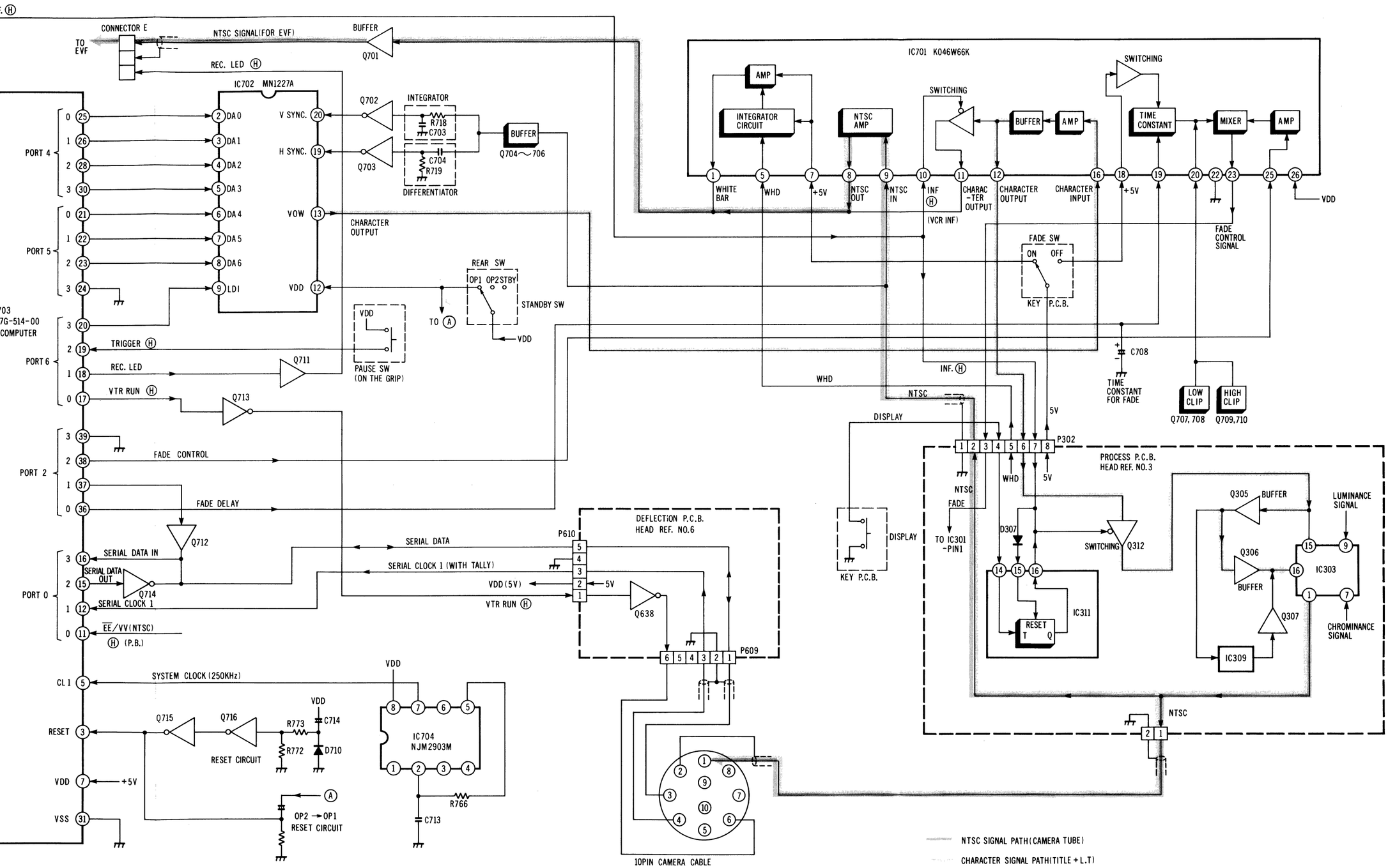

# MICRO COMPUTER BLOCK DIAGRAM (INF MODE)

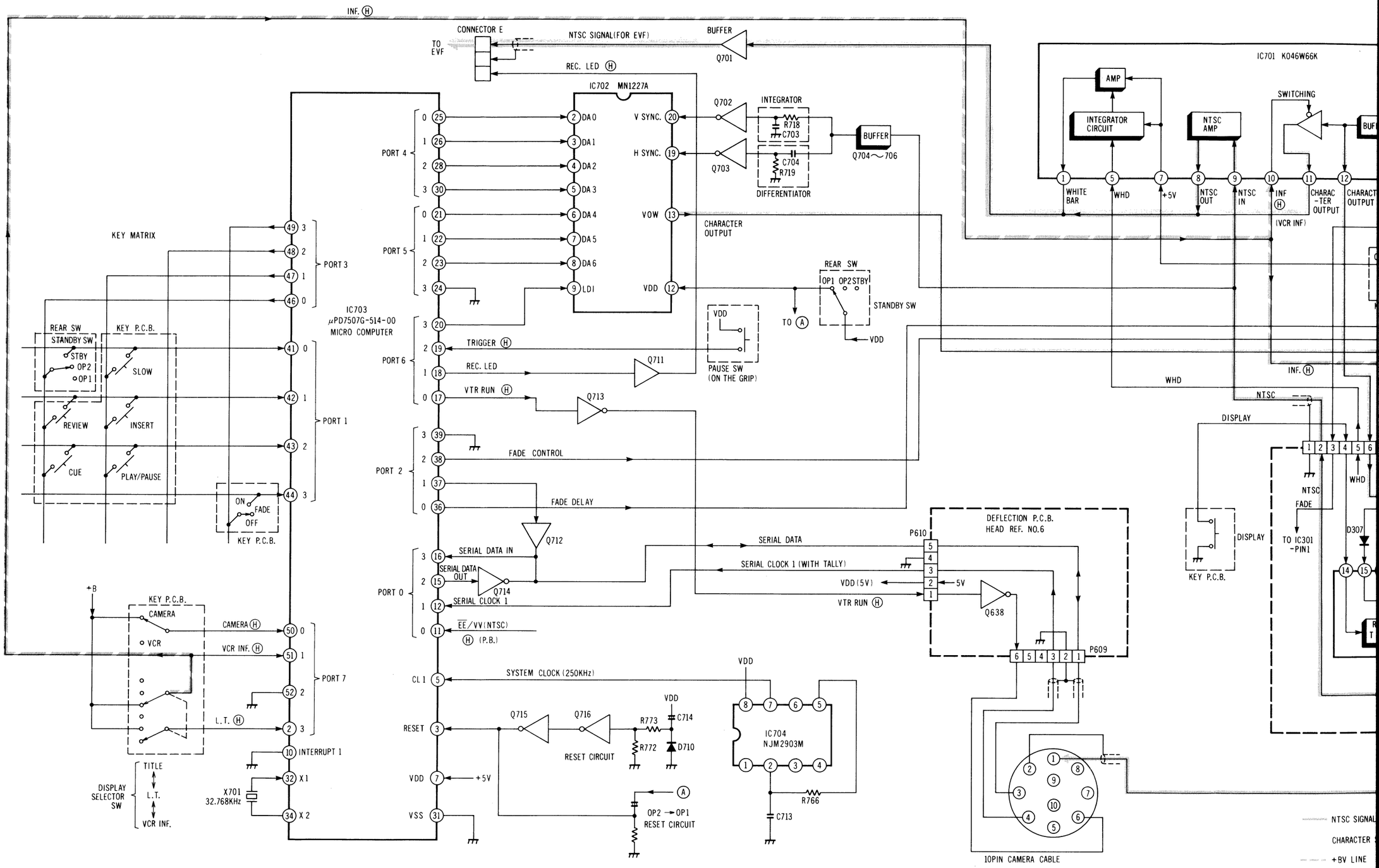

# IAGRAM (INF MODE)

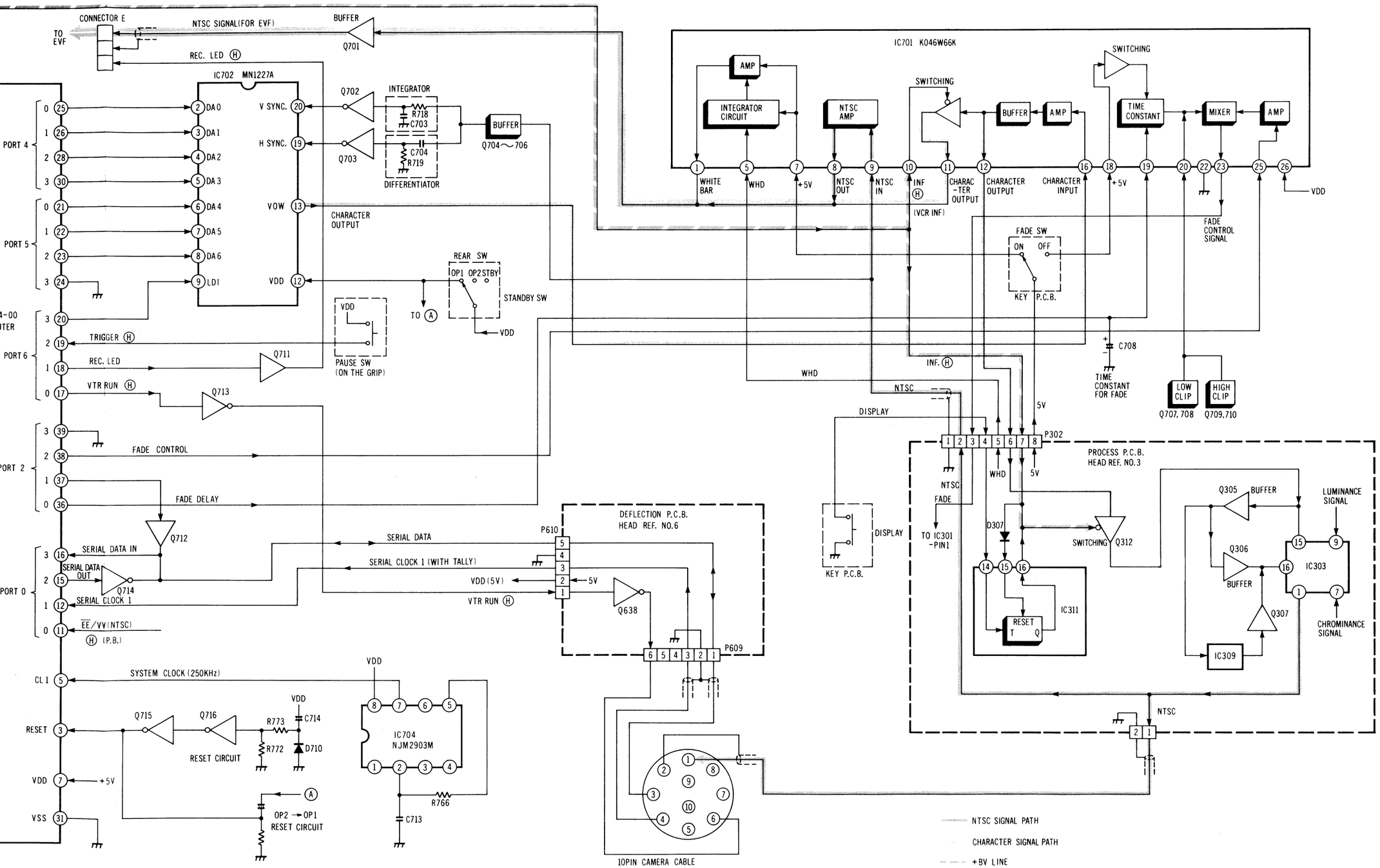

# MICRO COMPUTER BLOCK DIAGRAM (FADE MODE)

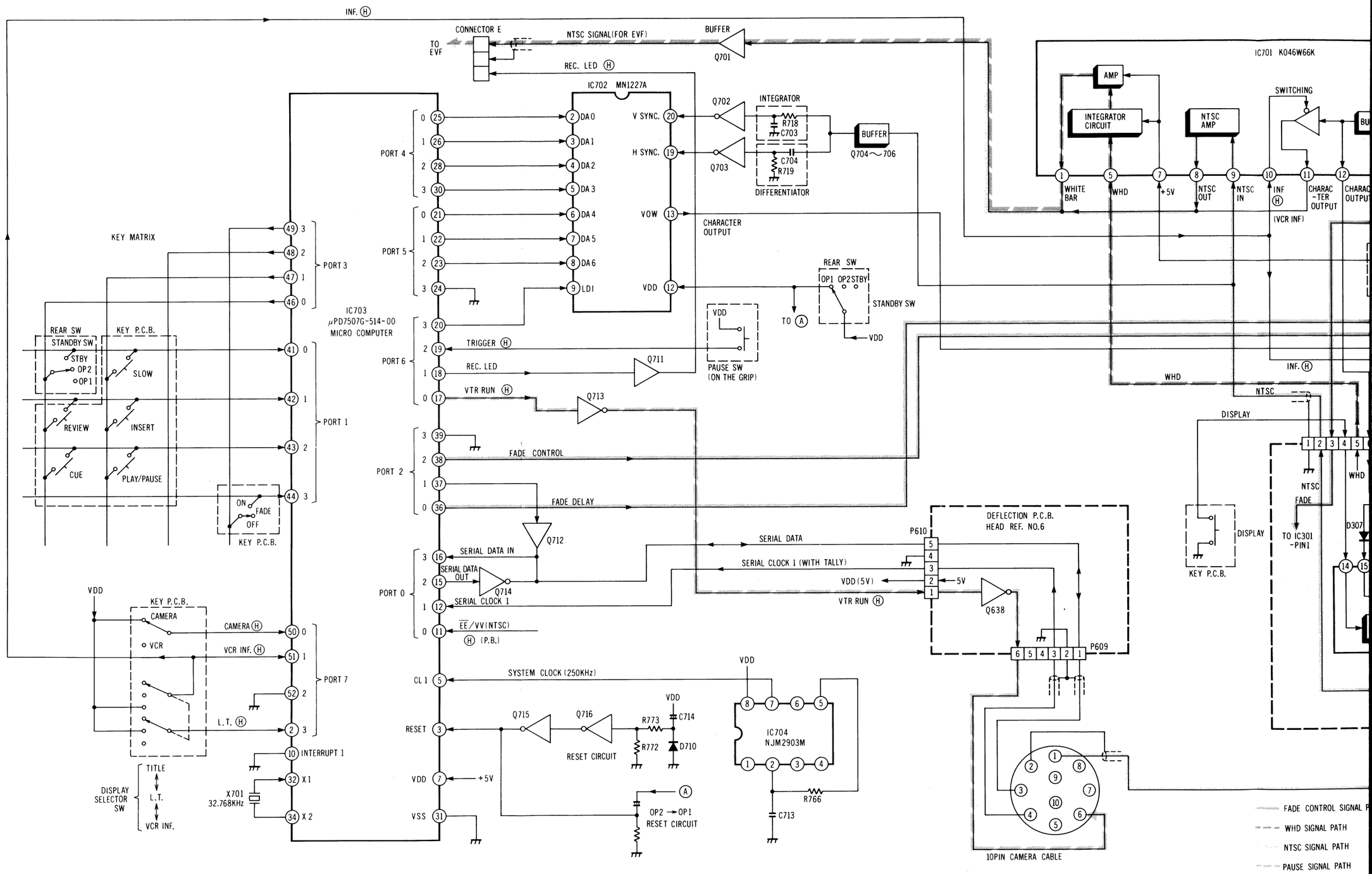

# DIAGRAM (FADE MODE)

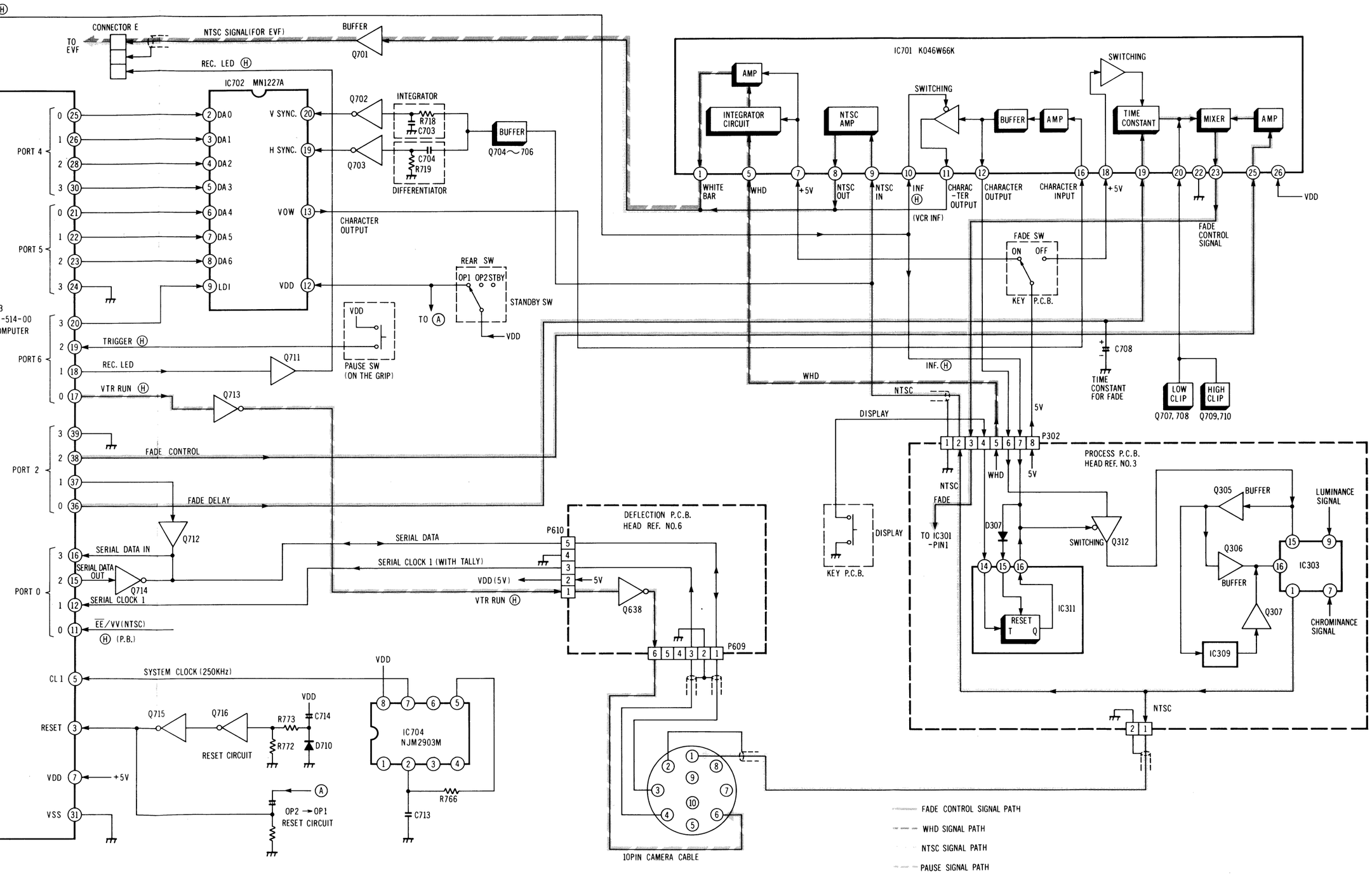

DIAGRAM

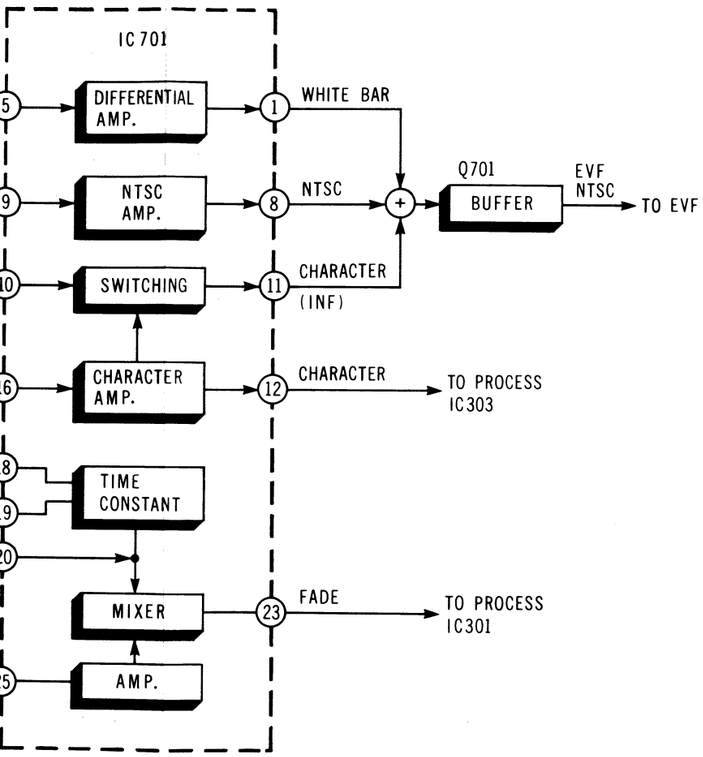


# CAMERA REMOTE CONTROL (M) BLOCK DIAGRAM

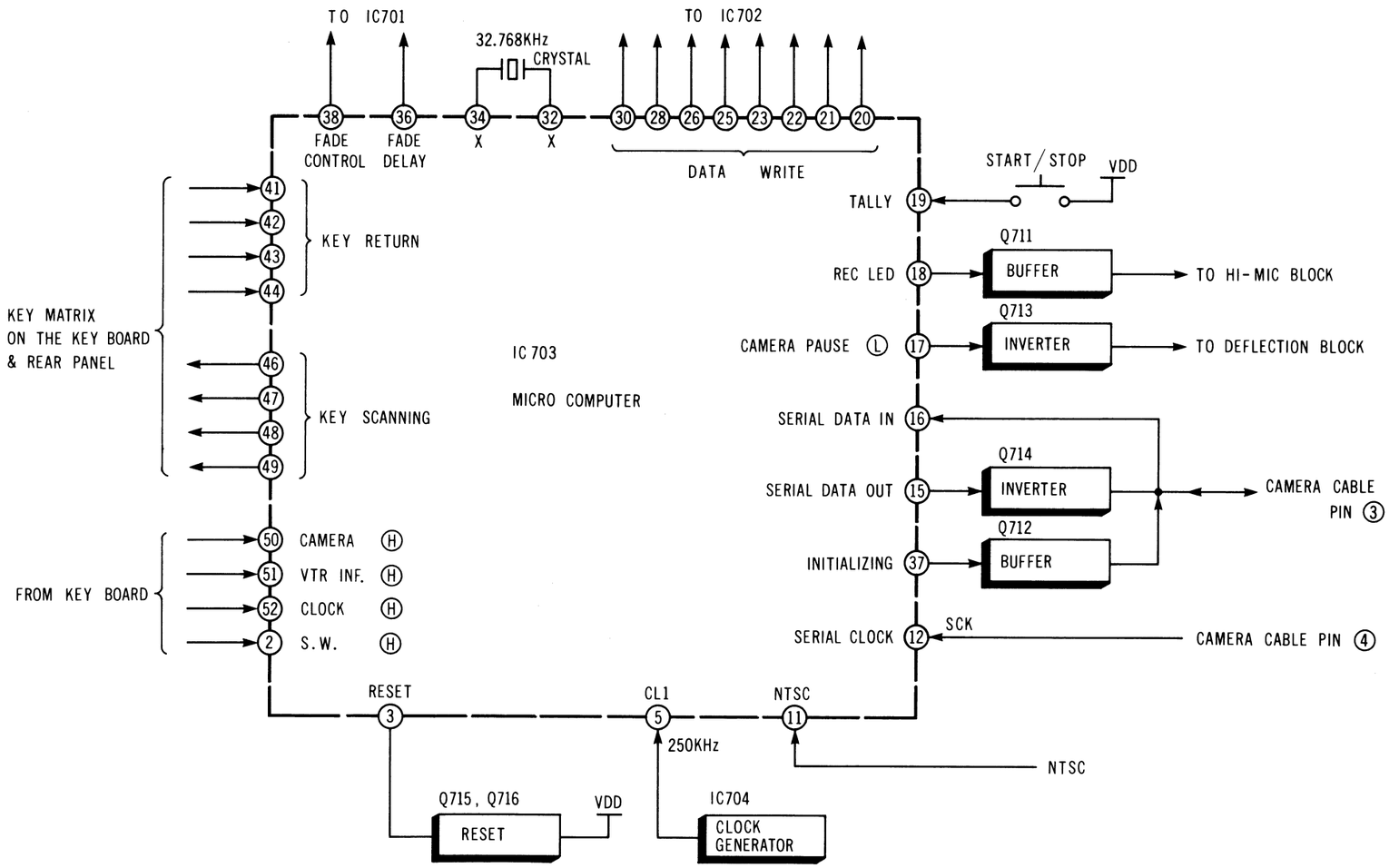

# CAMERA REMOTE CONTROL (S) BLOCK DIAGRAM

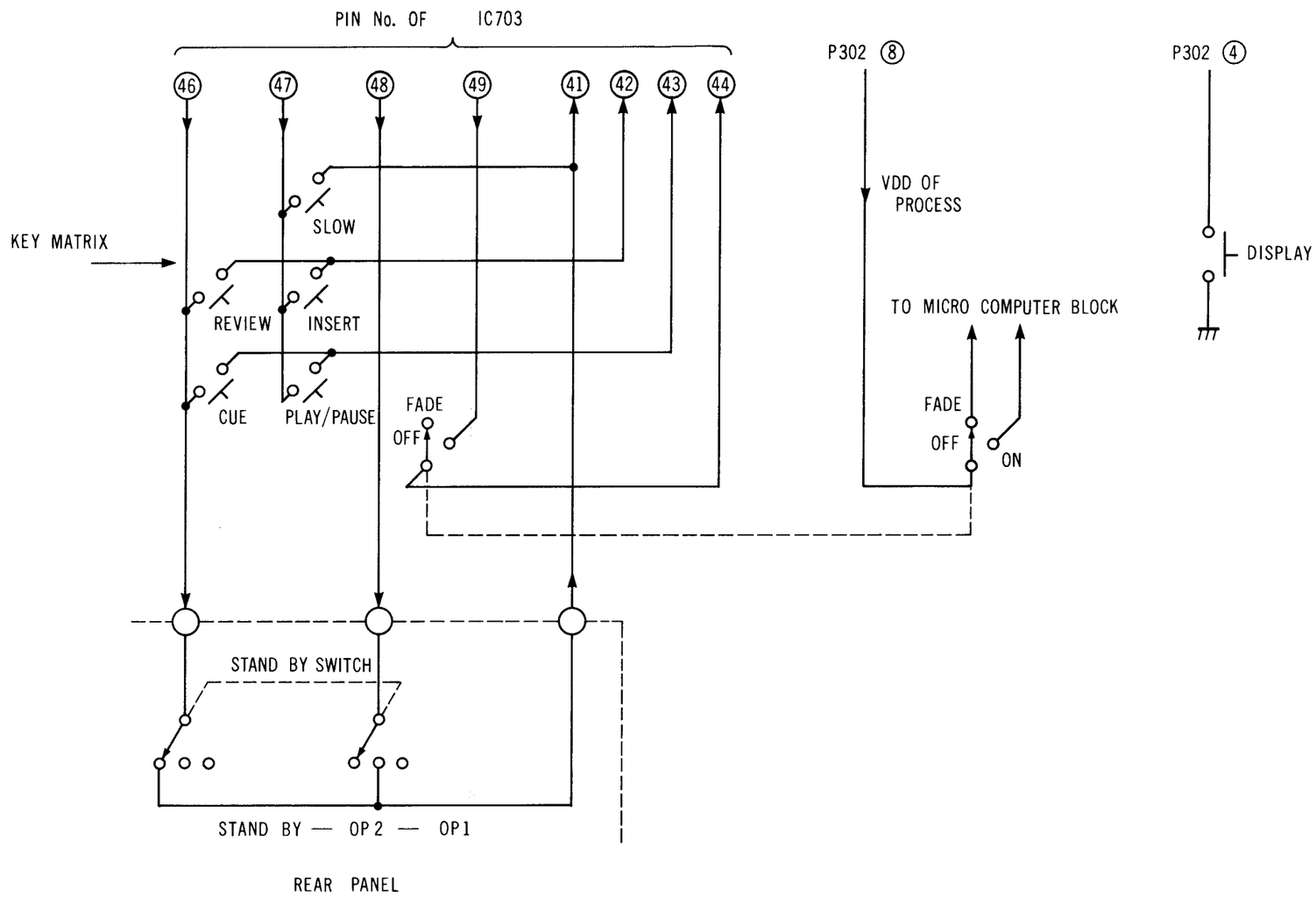

# ELECTRONIC VIEWFINDER BLOCK DIAGRAM

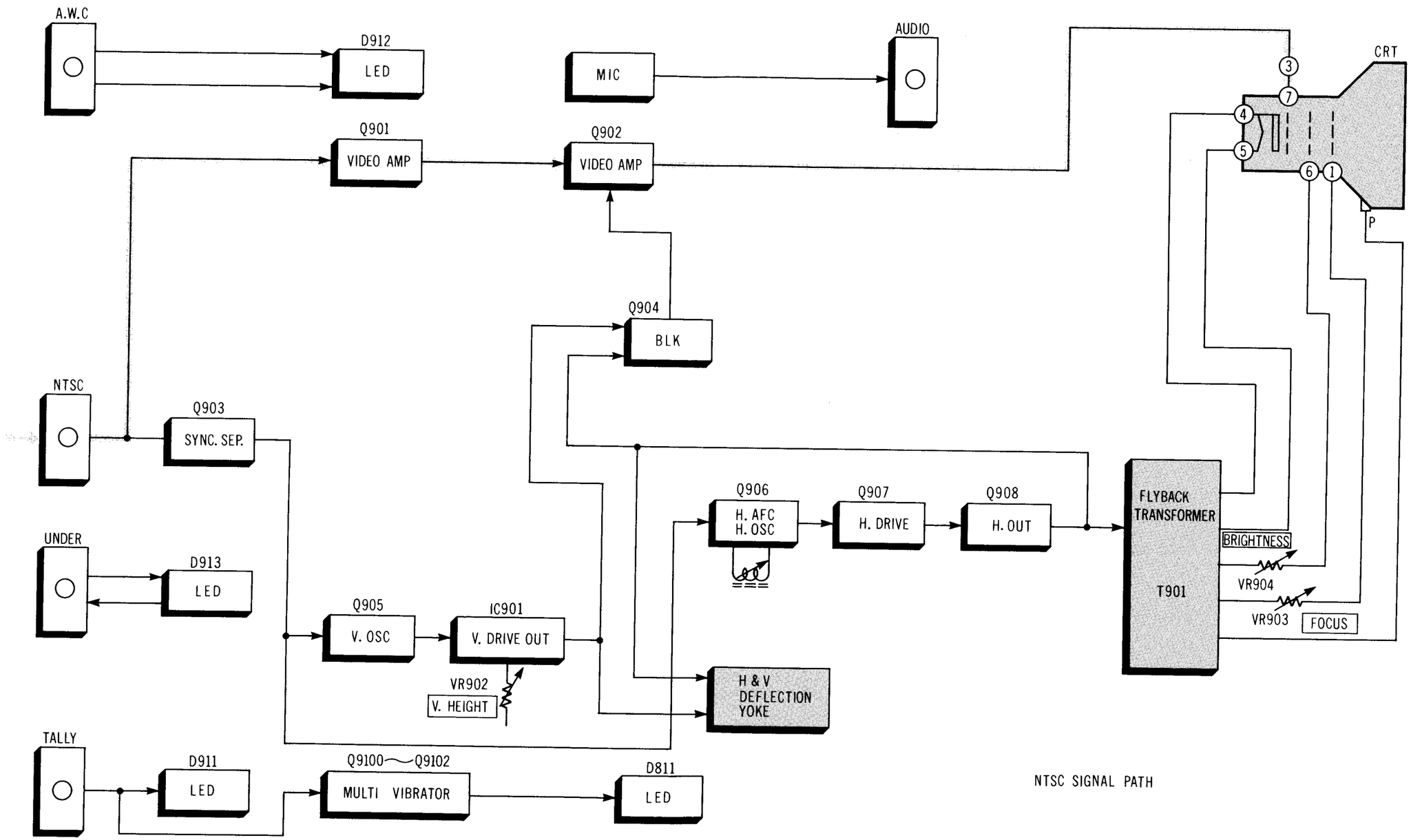


**PRODUCT SAFETY NOTE**

The shaded area on this **block diagram** incorporates special features important for protection from X-Radiation, fire and electrical shock hazards when servicing it is essential that only manufacturer's specified parts be used for the critical components in the shaded areas of the **block diagram**

ORDER NO. VRD-8202-048

# Service Manual

Color Video Camera

# PK-802

**Vol. 4**

## *Schematic Diagrams*

### SPECIFICATIONS:

| | |
|---|---|
| Power Source: | DC 12V ± 10%<br>AC 120V ± 10%, 60Hz ± 0.5%<br>(with Power Supply Unit) |
| **Power Consumption:**<br>**(with E.V.F)** | DC 5.8W at 12V DC (Battery)<br>DC 1.2W at standby |
| **Special Tube System:** | 2/3″ frequency separation single tube system (built-in stripe filter) |
| Single Carrier Frequency: | 4.3MHz |
| Focus System: | Electro-static type |
| Lens Mounting: | Built-in zoom lens (not "C" mount) |
| Lens: | 6:1 zoom lens with auto/manual iris control.<br>Auto zoom lens and macro construction<br>F: 1.4, f: 12mm—72mm<br>d: 1.0m to infinity |
| Lens Diameter: | 49mm |
| Light Sensitivity: | Minimum light intensity on optical image: 40 Lux (F: 1.4)<br>Optimum light intensity on optical image: 900 Lux |
| Video Output Level: | 1.0Vp-p, 75Ω (M type coaxial connector)<br>(Standard NTSC signal) |
| Sync. System: | Internal Sync: RS-170 |
| Signal to Noise Ratio: | More than 45dB |
| Horizontal Resolution: | More than 270 lines |
| Color Temperature Control: | 2 step switch (indoor/outdoor) & auto adjust |
| Microphone: | Condenser Microphone |
| Audio Output Level: | −20dB, Hi-impedance |
| Audio Output Impedance: | High impedance (1KΩ) |
| External Microphone Input Impedance: | 600Ω unbalanced |
| Electronic Viewfinder: | Monochrome 1 inch CRT |
| Operating Temperature: | 5°C to 35°C |
| Operating Humidity: | 10% to 75% |
| Operating Position: | Normal position only |
| Weight: | Camera Head with E.V.F.<br>5.1 lbs (with lens, 7ft. cable & shoulder pad/handle grip)<br>AC adaptor (option)<br>2.4 lbs |
| Dimensions: | Camera Head with E.V.F.<br>8.3″(W) × 8.7″(H) × 11.2″(D)<br>208mm(W) × 218mm(H) × 282mm(D)<br>AC adaptor (option)<br>3″(W) × 3″(H) × 6″(D)<br>80mm(W) × 75mm(H) × 149mm(D) |

Weight and dimensions shown are approximate.
Specifications are subject to change without notice.

**Panasonic**


Panasonic Company
Division of Matsushita Electric
Corporation of America
One Panasonic Way, Secaucus,
New Jersey 07094

Panasonic Hawaii Inc.
91-238 Kauhi St. Ewa Beach
P.O. Box 774
Honolulu, Hawaii 96808-0774

Panasonic Canada
Division of Matsushita Electric
of Canada Limited
5770 Ambler Drive, Mississauga,
Ontario, L4W 2T3

Panasonic Sales Company,
Division of Matsushita Electric
of Puerto Rico, Inc.
Ave, 65 De Infanteria, KM 9.7
Victoria Industrial Park
Carolina, Puerto Rico 00630

# CONTENTS

PRE-AMP SCHEMATIC DIAGRAM ..... 4-1
PRE-AMP CIRCUIT BOARD (VEPW0106A) ..... 4-1
PROCESS CIRCUIT BOARD (VEPW0107A) ..... 4-2
PROCESS SCHEMATIC DIAGRAM ..... 4-3
DEFLECTION SCHEMATIC DIAGRAM ..... 4-4
DEFLECTION CIRCUIT BOARD (VEPW0108A) ..... 4-5
REAR SIDE SCHEMATIC DIAGRAM ..... 4-6
REAR SIDE CIRCUIT BOARD (VEPW0110) ..... 4-6
REMOTE CONTROL SW CIRCUIT BOARD (VEPW0111) ..... 4-6
FRONT CIRCUIT BOARD (VEPW0113) ..... 4-6
SPECIAL TUBE SOCKET CIRCUIT BOARD (VEPW0124) ..... 4-6
POWER ZOOM SW SCHEMATIC DIAGRAM ..... 4-7
POWER ZOOM SW (A) CIRCUIT BOARD (VEPW0112) ..... 4-7
POWER ZOOM SW (B) CIRCUIT BOARD (VEPW0119) ..... 4-7
BIAS LIGHT CIRCUIT BOARD ..... 4-7
CAMERA REMOTE CONTROL (S) SCHEMATIC DIAGRAM ..... 4-8
CAMERA REMOTE CONTROL (S) CIRCUIT BOARD (VEPW0116) ..... 4-8
CAMERA REMOTE CONTROL (H) SCHEMATIC DIAGRAM ..... 4-9
CAMERA REMOTE CONTROL (H) CIRCUIT BOARD (VEPW0114) ..... 4-9
CAMERA REMOTE CONTROL (M) SCHEMATIC DIAGRAM ..... 4-10
CAMERA REMOTE CONTROL (M) CIRCUIT BOARD (VEPW0115) ..... 4-10
ELECTRONIC VIEWFINDER SCHEMATIC DIAGRAM ..... 4-11
ELECTRONIC VIEWFINDER (A) CIRCUIT BOARD (VEPW0122) ..... 4-11
ELECTRONIC VIEWFINDER (B) CIRCUIT BOARD (VEPW0135) ..... 4-11
EVF LED CIRCUIT BOARD (VEPW0123) ..... 4-11
ELECTRONIC VIEWFINDER INTERCONNECTION SCHEMATIC DIAGRAM .. 4-12
POWER SUPPLY SCHEMATIC DIAGRAM
(OPTIONAL ACCESSORY) ..... 4-12
POWER SUPPLY CIRCUIT BOARD ..... 4-12
CIRCUIT BOARD LAYOUT ..... 4-13
CAMERA UNIT INTERCONNECTION SCHEMATIC DIAGRAM ..... 4-13

# PRE-AMP SCHEMATIC DIAGRAM

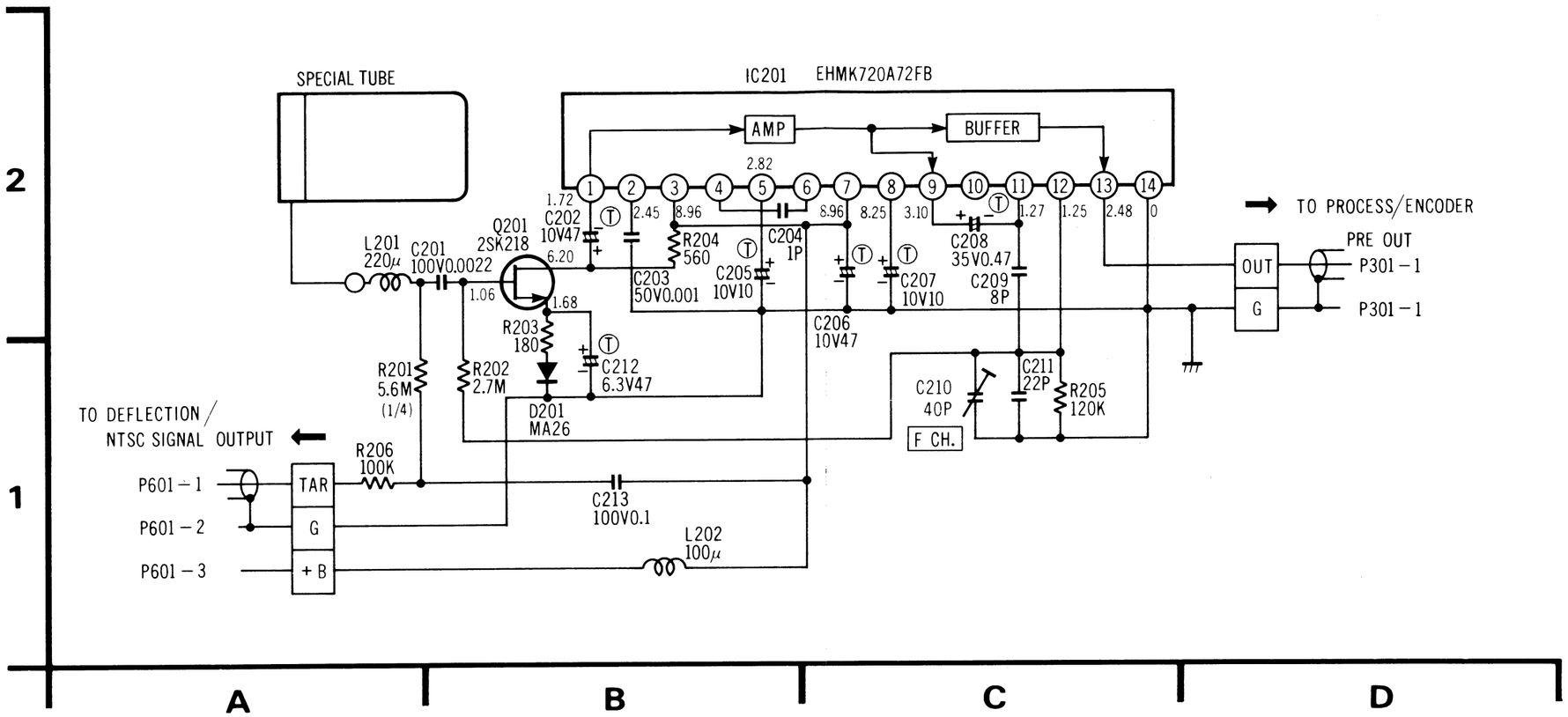


## PRE-AMP CIRCUIT BOARD (VEPW0106A)

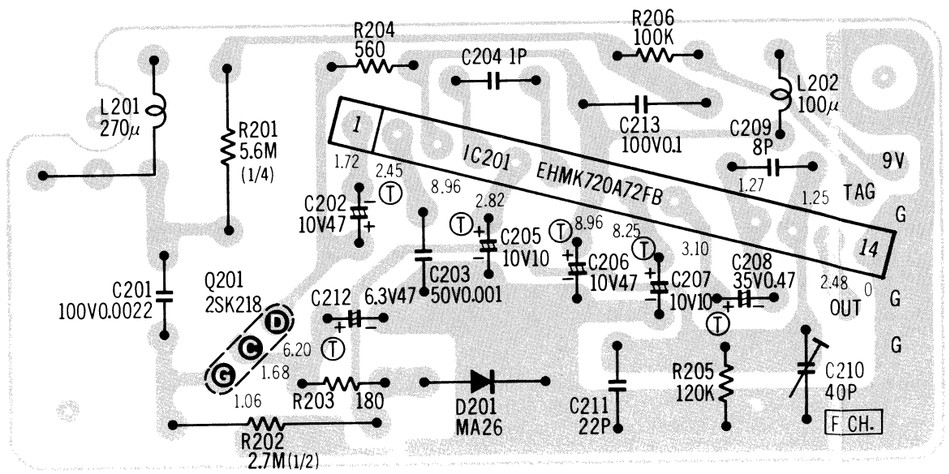


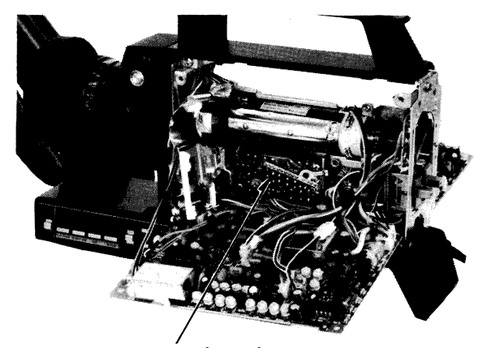

Pre-Amp Circuit Board

# PRE-AMP SCHEMATIC DIAGRAM

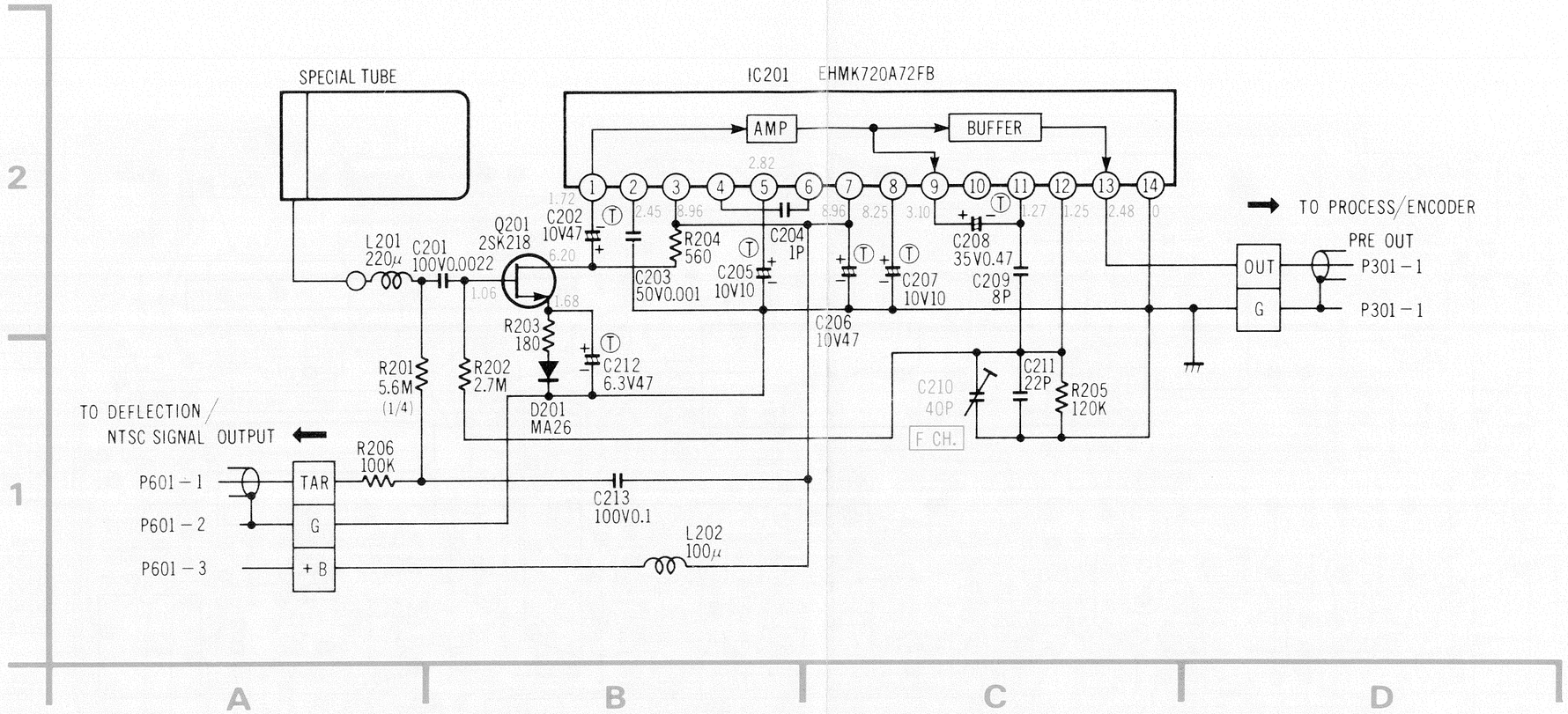


## PRE-AMP CIRCUIT BOARD (VEPW0106A)

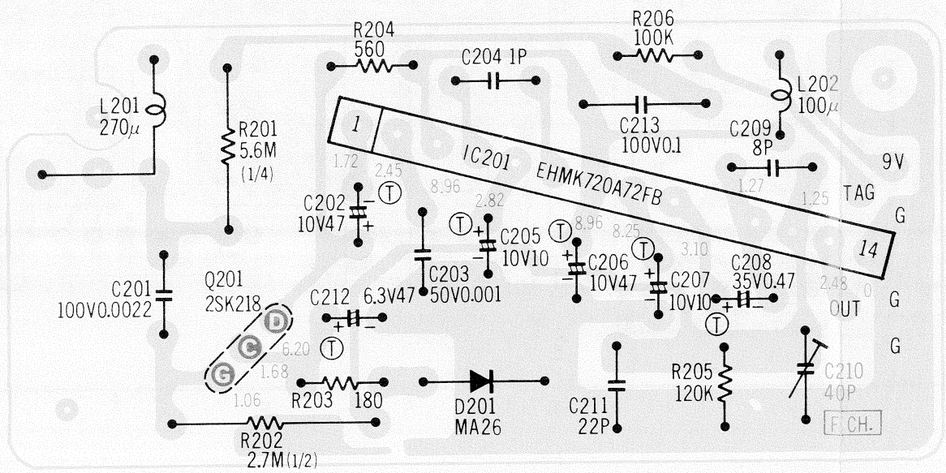


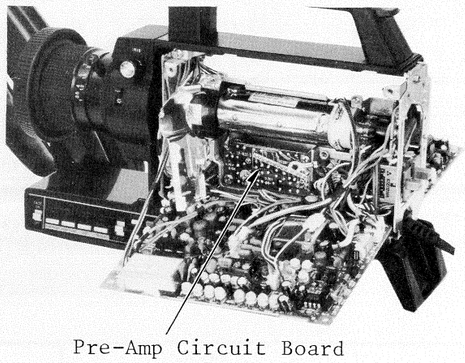

# PROCESS CIRCUIT BOARD (VEPW0107A)

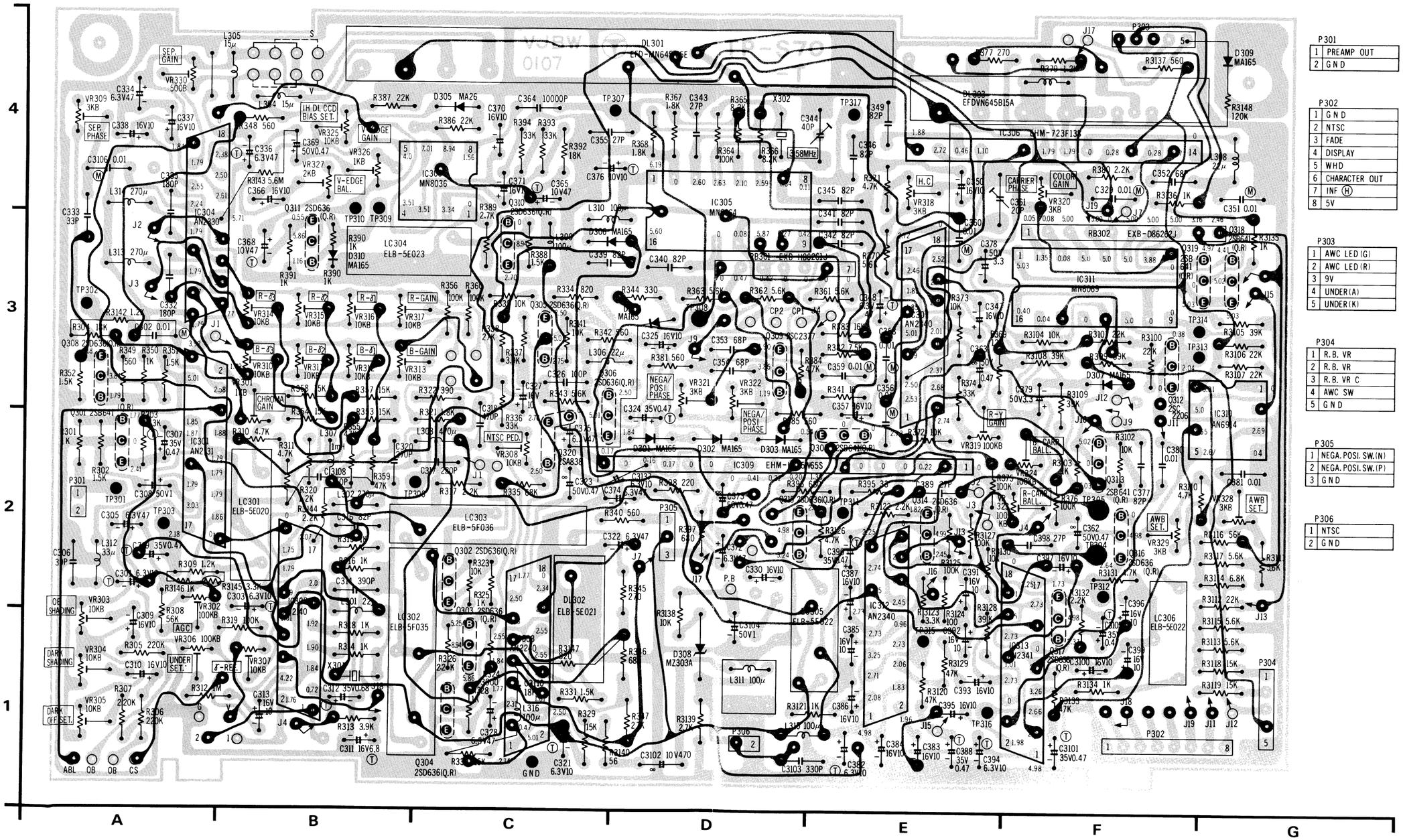


| P301 | |
|---|---|
| 1 | PREAMP OUT |
| 2 | GND |

| P302 | |
|---|---|
| 1 | GND |
| 2 | NTSC |
| 3 | FADE |
| 4 | DISPLAY |
| 5 | WHD |
| 6 | CHARACTER OUT |
| 7 | INF (H) |
| 8 | 5V |

| P303 | |
|---|---|
| 1 | AWC LED(G) |
| 2 | AWC LED(R) |
| 3 | 9V |
| 4 | UNDER(A) |
| 5 | UNDER(K) |

| P304 | |
|---|---|
| 1 | R.B. VR |
| 2 | R.B. VR |
| 3 | R.B. VR C |
| 4 | AWC SW |
| 5 | GND |

| P305 | |
|---|---|
| 1 | NEGA. POSI. SW.(N) |
| 2 | NEGA. POSI. SW.(P) |
| 3 | GND |

| P306 | |
|---|---|
| 1 | NTSC |
| 2 | GND |

| | |
|---|---|
| IC301 | A-2 |
| IC302 | B-1 |
| IC303 | C-1 |
| IC304 | A-3 |
| IC305 | D-4 |
| IC306 | F-4 |
| IC307 | E-3 |
| IC308 | C-4 |
| IC309 | D-2 |
| IC310 | G-2 |
| IC311 | F-3 |
| IC312 | E-1 |
| IC313 | F-1 |
| Q301 | A-2 |
| Q302 | C-2 |
| Q303 | C-1 |
| Q304 | C-1 |
| Q305 | C-3 |
| Q306 | C-2 |
| Q307 | E-2 |
| Q308 | A-3 |
| Q309 | D-3 |
| Q310 | C-3 |
| Q311 | B-3 |
| Q312 | F-3 |
| Q313 | F-2 |
| Q314 | E-2 |
| Q315 | D-2 |
| Q316 | F-2 |
| Q317 | F-1 |
| Q318 | G-3 |
| Q319 | G-3 |
| Q320 | C-2 |
| VR301 | B-2 |
| VR302 | A-1 |
| VR303 | A-1 |
| VR304 | A-1 |
| VR305 | A-1 |
| VR306 | A-1 |
| VR307 | B-1 |
| VR308 | C-2 |
| VR309 | A-4 |
| VR310 | B-3 |
| VR311 | B-3 |
| VR312 | B-3 |
| VR313 | B-3 |
| VR314 | B-3 |
| VR315 | B-3 |
| VR316 | B-3 |
| VR317 | B-3 |
| VR318 | E-4 |
| VR319 | E-2 |
| VR320 | F-4 |
| VR321 | D-3 |
| VR322 | D-3 |
| VR323 | F-2 |
| VR324 | F-2 |
| VR325 | B-4 |
| VR326 | B-4 |
| VR327 | B-4 |
| VR328 | G-2 |
| VR329 | F-2 |
| VR330 | A-4 |
| C344 | D-4 |
| C361 | E-4 |

# PROCESS CIRCUIT BOARD (VEPW0107A)

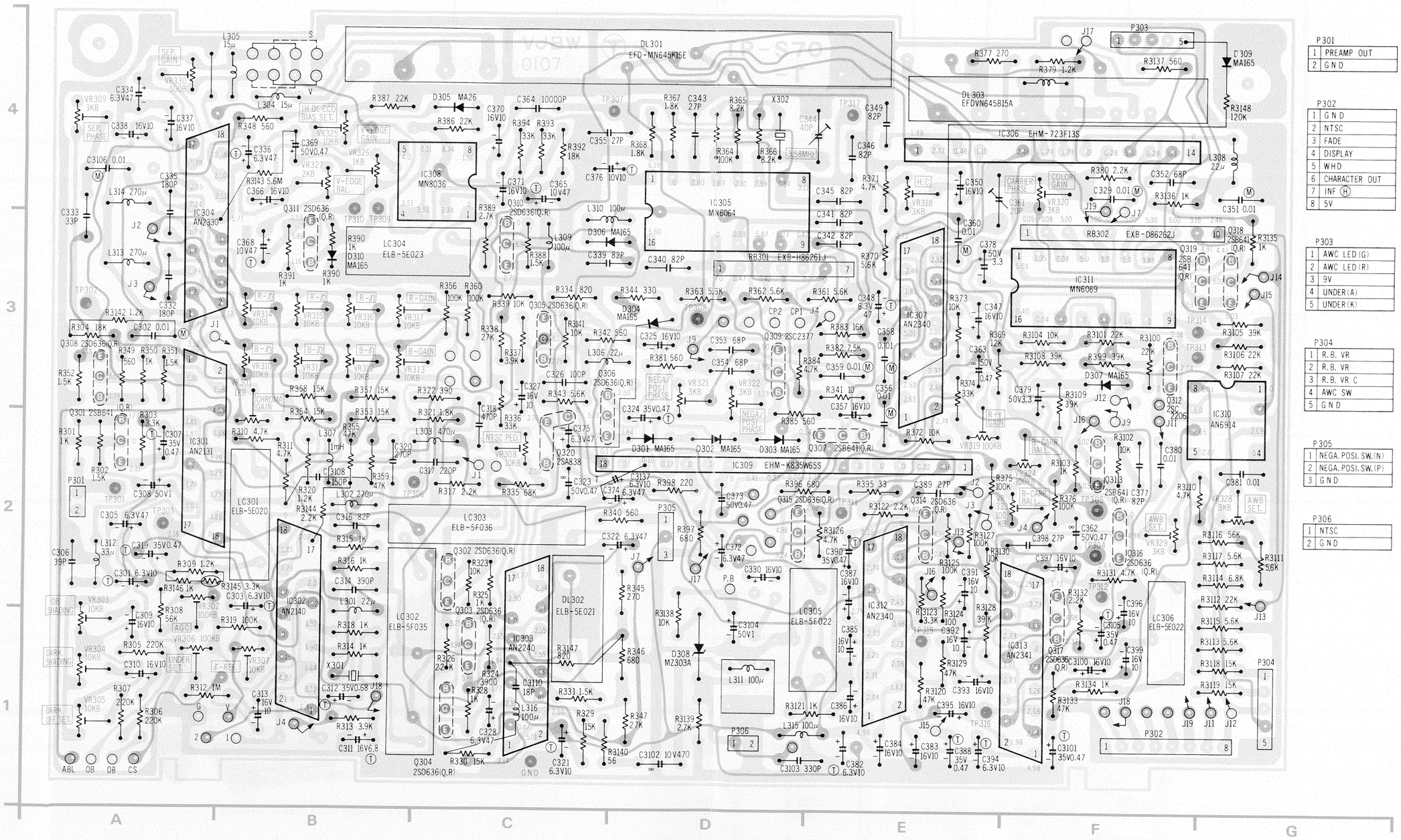


| P301 | |
|---|---|
| 1 | PREAMP OUT |
| 2 | G N D |

| P302 | |
|---|---|
| 1 | G N D |
| 2 | NTSC |
| 3 | FADE |
| 4 | DISPLAY |
| 5 | WHD |
| 6 | CHARACTER OUT |
| 7 | INF Ⓗ |
| 8 | 5V |

| P303 | |
|---|---|
| 1 | AWC LED(G) |
| 2 | AWC LED(R) |
| 3 | 9V |
| 4 | UNDER(A) |
| 5 | UNDER(K) |

| P304 | |
|---|---|
| 1 | R.B. VR |
| 2 | R.B. VR |
| 3 | R.B. VR C |
| 4 | AWC SW |
| 5 | G N D |

| P305 | |
|---|---|
| 1 | NEGA. POSI. SW.(N) |
| 2 | NEGA. POSI. SW.(P) |
| 3 | G N D |

| P306 | |
|---|---|
| 1 | NTSC |
| 2 | G N D |

| | |
|---|---|
| IC301 | A-2 |
| IC302 | B-1 |
| IC303 | C-1 |
| IC304 | A-3 |
| IC305 | D-4 |
| IC306 | F-4 |
| IC307 | E-3 |
| IC308 | C-4 |
| IC309 | D-2 |
| IC310 | G-2 |
| IC311 | F-3 |
| IC312 | E-1 |
| IC313 | F-1 |
| Q301 | A-2 |
| Q302 | C-2 |
| Q303 | C-1 |
| Q304 | C-1 |
| Q305 | C-3 |
| Q306 | C-2 |
| Q307 | E-2 |
| Q308 | A-3 |
| Q309 | D-3 |
| Q310 | C-3 |
| Q311 | B-3 |
| Q312 | F-3 |
| Q313 | F-2 |
| Q314 | E-2 |
| Q315 | D-2 |
| Q316 | F-2 |
| Q317 | F-1 |
| Q318 | G-3 |
| Q319 | G-3 |
| Q320 | C-2 |
| VR301 | B-2 |
| VR302 | A-1 |
| VR303 | A-1 |
| VR304 | A-1 |
| VR305 | A-1 |
| VR306 | A-1 |
| VR307 | B-1 |
| VR308 | C-2 |
| VR309 | A-4 |
| VR310 | B-3 |
| VR311 | B-3 |
| VR312 | B-3 |
| VR313 | B-3 |
| VR314 | B-3 |
| VR315 | B-3 |
| VR316 | B-3 |
| VR317 | B-3 |
| VR318 | E-4 |
| VR319 | E-2 |
| VR320 | F-4 |
| VR321 | D-3 |
| VR322 | D-3 |
| VR323 | F-2 |
| VR324 | F-2 |
| VR325 | B-4 |
| VR326 | B-4 |
| VR327 | B-4 |
| VR328 | G-2 |
| VR329 | F-2 |
| VR330 | A-4 |
| C344 | D-4 |
| C361 | E-4 |

# PROCESS SCHEMATIC DIAGRAM

| | | |
|---|---|---|
| VR301 | CHROMA GAIN | E−8 |
| VR302 | AGC | E−8 |
| VR303 | OB SHADING | D−7 |
| VR304 | DARK SHADING | D−7 |
| VR305 | DARK OFFSET | D−7 |
| VR306 | UNDER PHASE | E−8 |
| VR307 | γ − REF. | G−8 |
| VR308 | NTSC PED. | I−8 |
| VR309 | SEP. PHASE | C−6 |
| VR310 | B − γ3 | D−5 |
| VR311 | B − γ2 | D−5 |
| VR312 | B − γ1 | D−5 |
| VR313 | B − GAIN | D−5 |
| VR314 | R − γ3 | D−5 |
| VR315 | R − γ2 | D−5 |
| VR316 | R − γ1 | D−5 |
| VR317 | R − GAIN | D−5 |
| VR318 | H.C. | G−6 |
| VR319 | R − Y GAIN | G−6 |
| VR320 | COLOR GAIN | J−6 |
| VR321 | NEGA/POSI PHASE | I−5 |
| VR322 | NEGA/POSI PHASE | J−5 |
| VR323 | R − CARR. BALL. | H−5 |
| VR324 | B − CARR. BALL. | H−5 |
| VR325 | IH DL. CCD. BIAS SET. | I−4 |
| VR326 | V − EDGE GAIN | J−4 |
| VR327 | V − EDGE BALL. | J−3 |
| VR328 | AWB SET. | E−3 |
| VR329 | AWB SET. | E−3 |
| VR330 | SEP. GAIN | D−6 |
| C344 | 3.58 MHz | F−5 |
| VR361 | CARRIER PHASE | H−6 |

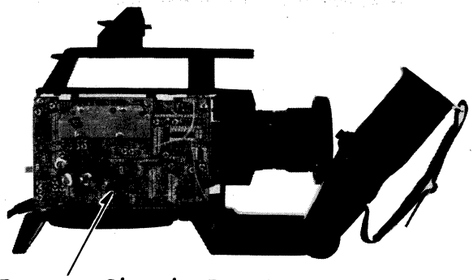

Process Circuit Board

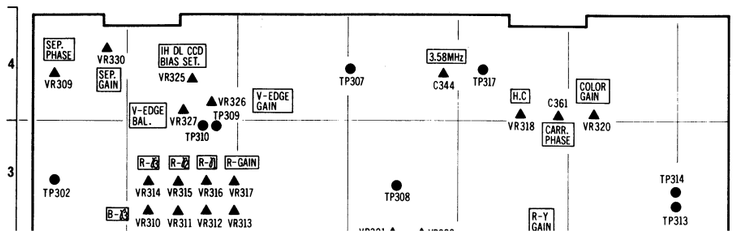


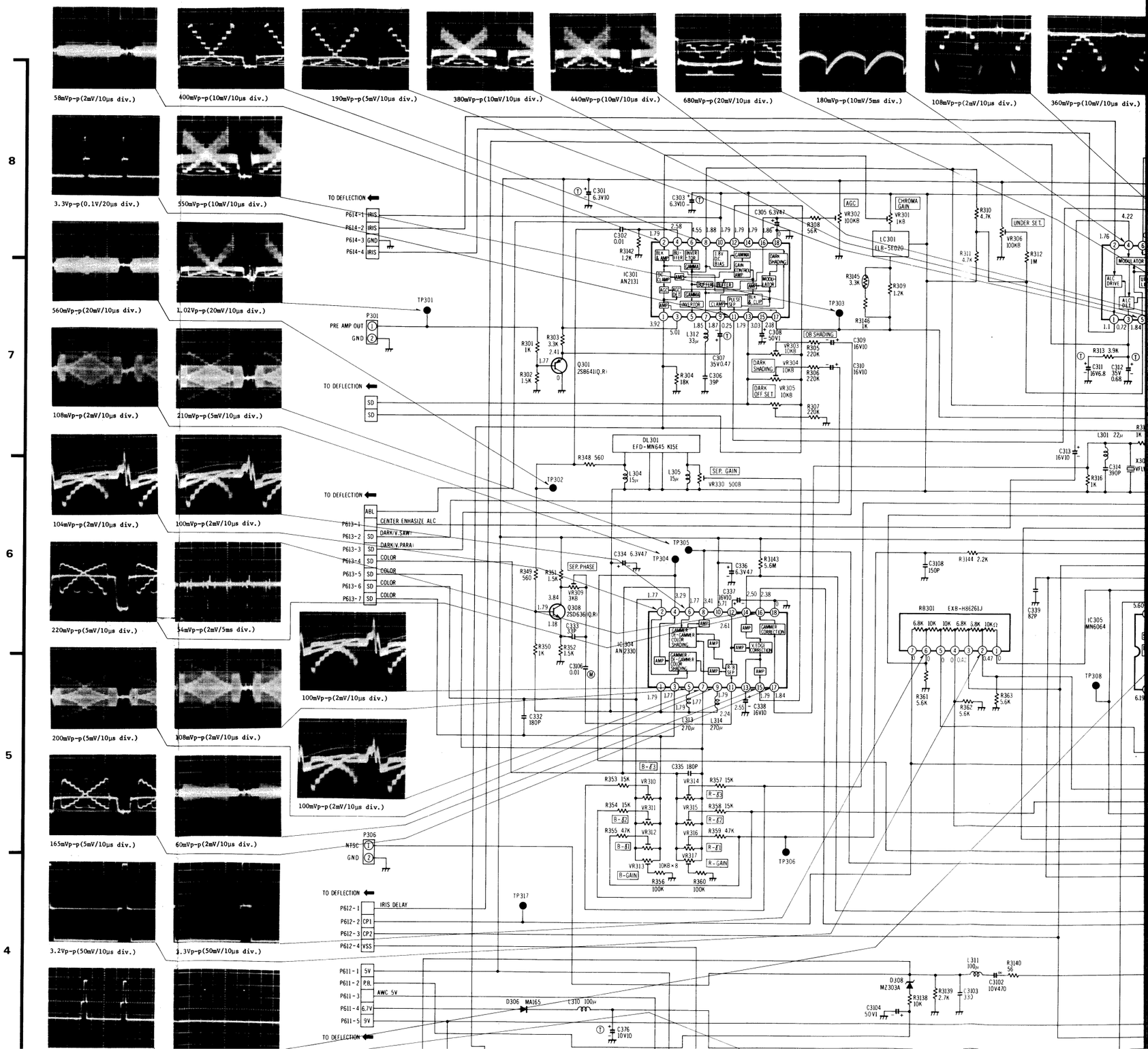

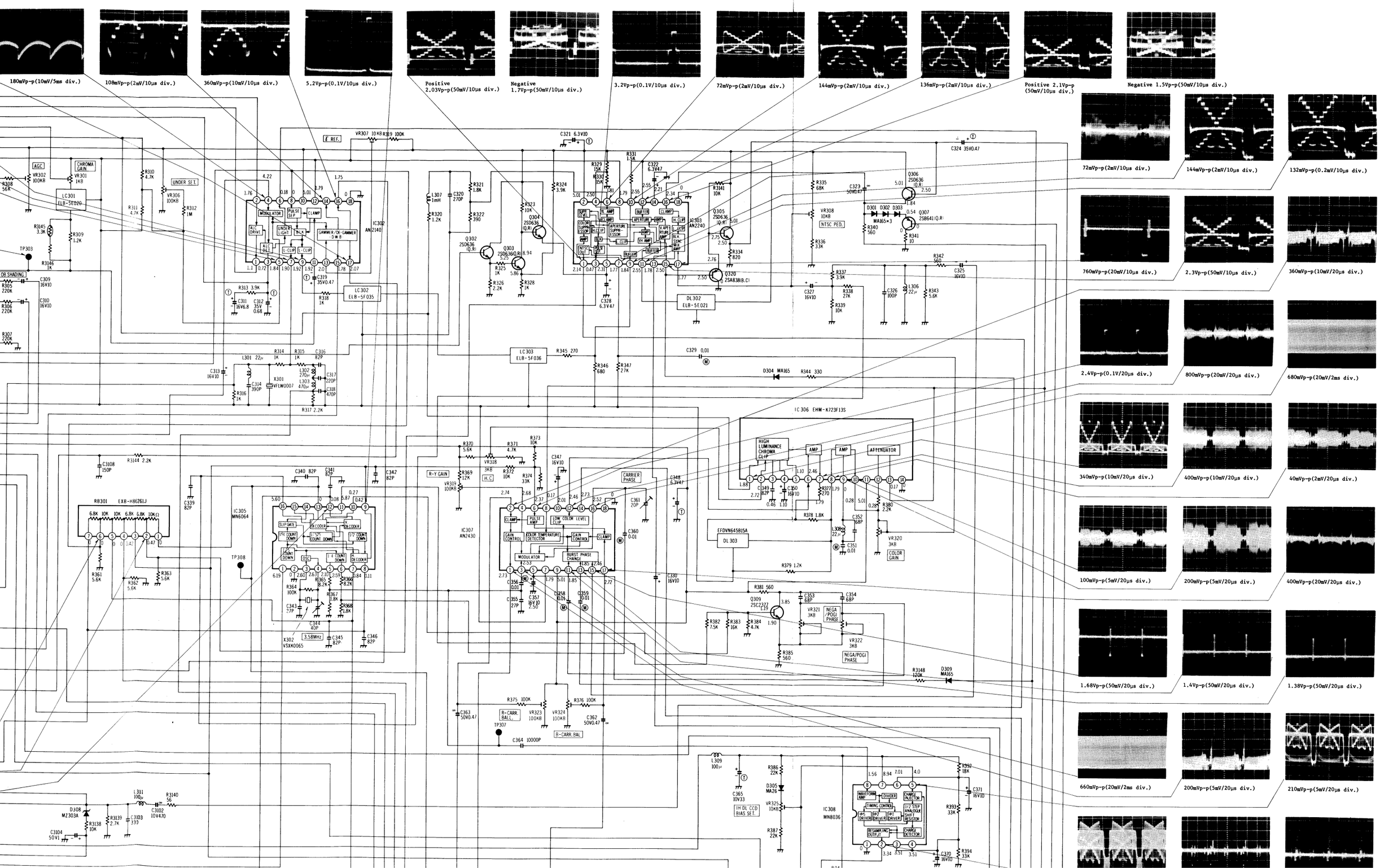
180mVp-p(10mV/5ms div.)
108mVp-p(2mV/10μs div.)
360mVp-p(10mV/10μs div.)
5.2Vp-p(0.1V/10μs div.)
Positive 2.03Vp-p(50mV/10μs div.)
Negative 1.7Vp-p(50mV/10μs div.)
3.2Vp-p(0.1V/10μs div.)
72mVp-p(2mV/10μs div.)
144mVp-p(2mV/10μs div.)
136mVp-p(2mV/10μs div.)
Positive 2.1Vp-p (50mV/10μs div.)
Negative 1.5Vp-p(50mV/10μs div.)
72mVp-p(2mV/10μs div.)
144mVp-p(2mV/10μs div.)
132mVp-p(0.2mV/10μs div.)
760mVp-p(20mV/10μs div.)
2.3Vp-p(50mV/10μs div.)
360mVp-p(10mV/20μs div.)
2.4Vp-p(0.1V/20μs div.)
800mVp-p(20mV/20μs div.)
680mVp-p(20mV/2ms div.)
340mVp-p(10mV/20μs div.)
400mVp-p(10mV/20μs div.)
40mVp-p(2mV/20μs div.)
100mVp-p(5mV/20μs div.)
200mVp-p(5mV/20μs div.)
400mVp-p(20mV/20μs div.)
1.68Vp-p(50mV/20μs div.)
1.4Vp-p(50mV/20μs div.)
1.38Vp-p(50mV/20μs div.)
660mVp-p(20mV/2ms div.)
200mVp-p(5mV/20μs div.)
210mVp-p(5mV/20μs div.)
AGC
CHROMA GAIN
UNDER SET.
LC301 ELB-5E020
MODULATOR
PULSE SEP
CLAMP
ALC DRIVE
UNDER LIGHT
BLK
GAMMER/DE-GAMMER DWB
E-CLIP
I-CLIP
IC302 AN2140
LC302 ELB-5F035
E REF.
VR307 10KB
R319 100K
C321 6.3V10
C324 35V0.47
IC303 AN2240
DL302 ELB-5E021
LC303 ELB-5F036
D304 MA165
IC306 EHM-K723F13S
HIGH LUMINANCE CHROMA CLIP
AMP
ATTENUATOR
EFDVN645B15A
DL303
IC305 MN6064
IC307 AN2430
R-Y GAIN
H.C
CARRIER PHASE
PULSE AMP
LOW COLOR LEVEL CLIP
GAIN CONTROL
COLOR TEMPERATURE DETECTOR
MODULATOR
BURST PHASE CHANGE
NEGA/POGI PHASE
COLOR GAIN
UNDER SET.
NTSC PED.
RB301 EXB-H8E261J
X302 VSXK0065
3.58MHz
R-CARR. BALL.
B-CARR. BAL
TP303
TP307
TP308
IC308 MN8036
WAVEFORM AMP
DIVIDER
CHARGE INJECTOR
TIMING CONTROL
1/2 STEP ANALOGUE SHIFT REGISTER
RESAMPLING OUTPUT
CHARGE DETECTOR
1H DL CCD BIAS SET.
D308 MZ303A
L311 100μ
R3140 56
C3102 10V470
C3104 50V1
R3138 10K
R3139 2.7K
C3103 330
L309 100μ
C365 10V33
D305 MA26
VR325 10KB
R386 22K
R387 22K
R392 18K
R393 33K
R394 33K
C371 16V10
C370 16V10

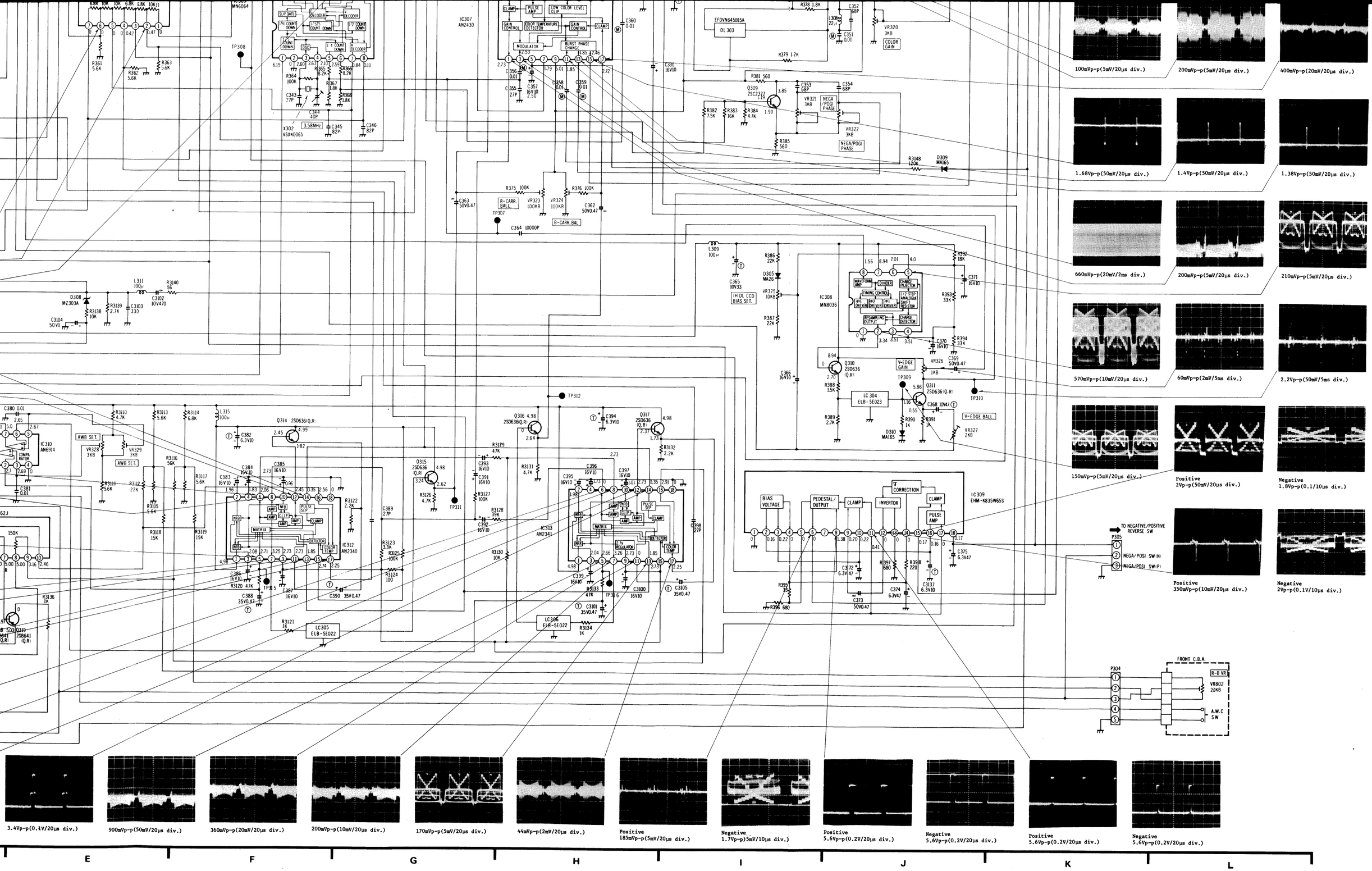


100mVp-p(5mV/20μs div.)

200mVp-p(5mV/20μs div.)

400mVp-p(20mV/20μs div.)

1.68Vp-p(50mV/20μs div.)

1.4Vp-p(50mV/20μs div.)

1.38Vp-p(50mV/20μs div.)

660mVp-p(20mV/2ms div.)

200mVp-p(5mV/20μs div.)

210mVp-p(5mV/20μs div.)

570mVp-p(10mV/20μs div.)

60mVp-p(2mV/5ms div.)

2.2Vp-p(50mV/5ms div.)

150mVp-p(5mV/20μs div.)

Positive
2Vp-p(50mV/20μs div.)

Negative
1.8Vp-p(0.1/10μs div.)

Positive
350mVp-p(10mV/20μs div.)

Negative
2Vp-p(0.1V/10μs div.)

3.4Vp-p(0.1V/20μs div.)

900mVp-p(50mV/20μs div.)

360mVp-p(20mV/20μs div.)

200mVp-p(10mV/20μs div.)

170mVp-p(5mV/20μs div.)

44mVp-p(2mV/20μs div.)

Positive
185mVp-p(5mV/20μs div.)

Negative
1.7Vp-p)5mV/10μs div.)

Positive
5.6Vp-p(0.2V/20μs div.)

Negative
5.6Vp-p(0.2V/20μs div.)

Positive
5.6Vp-p(0.2V/20μs div.)

Negative
5.6Vp-p(0.2V/20μs div.)

E F G H I J K L

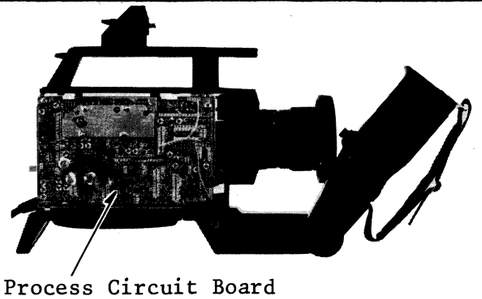

Process Circuit Board

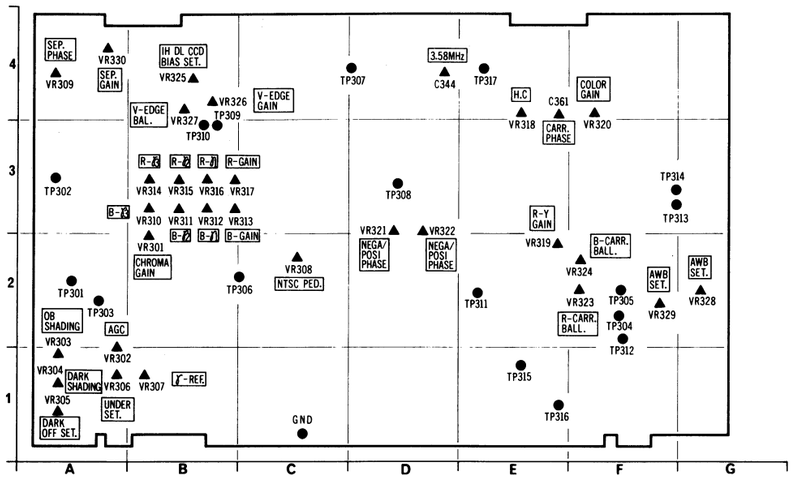


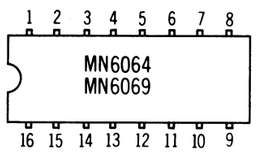


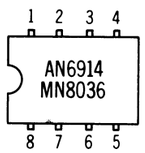


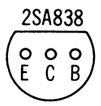


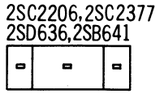


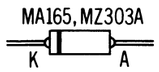


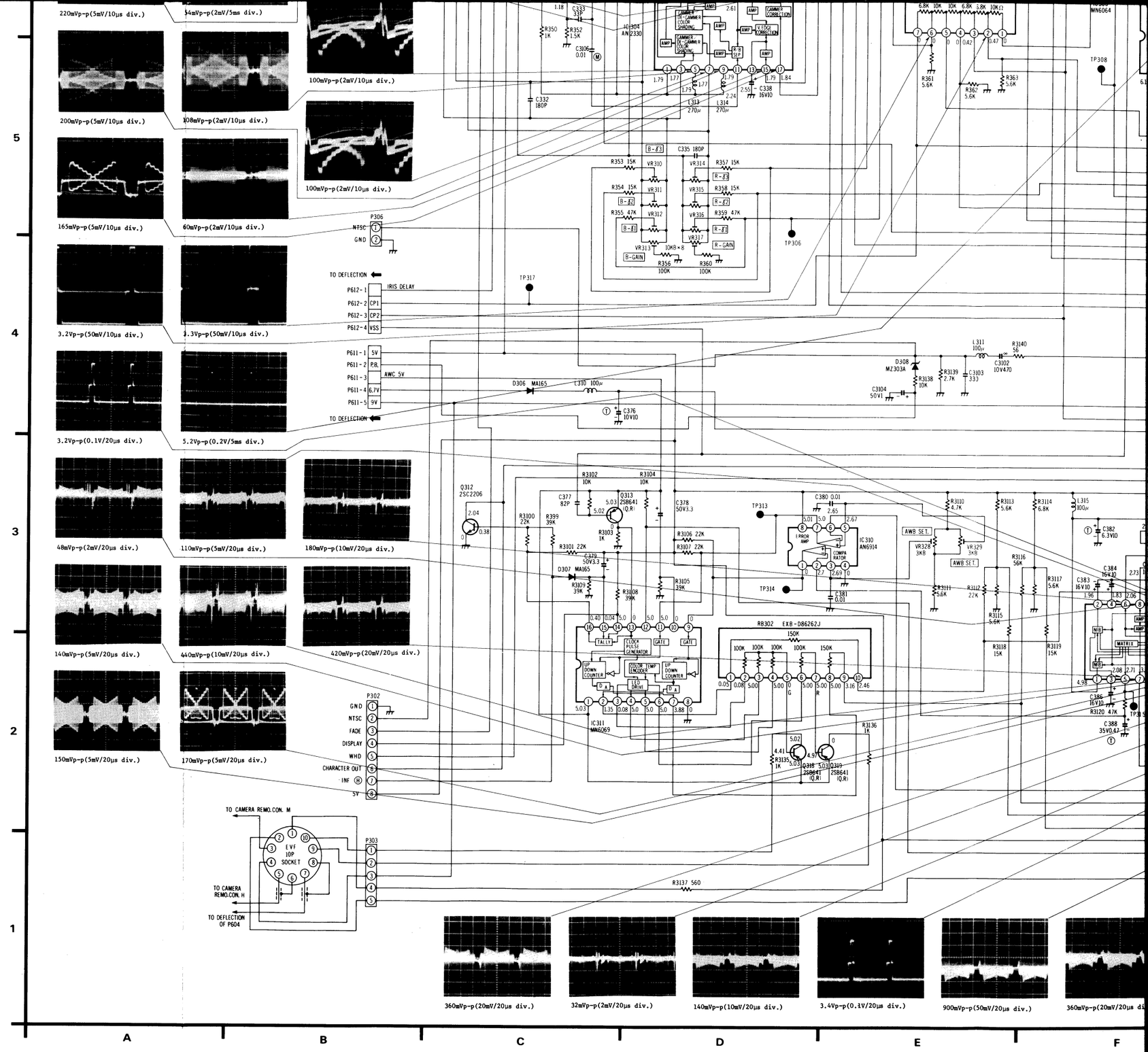

# DEFLECTION SCHEMATIC DIAGRAM

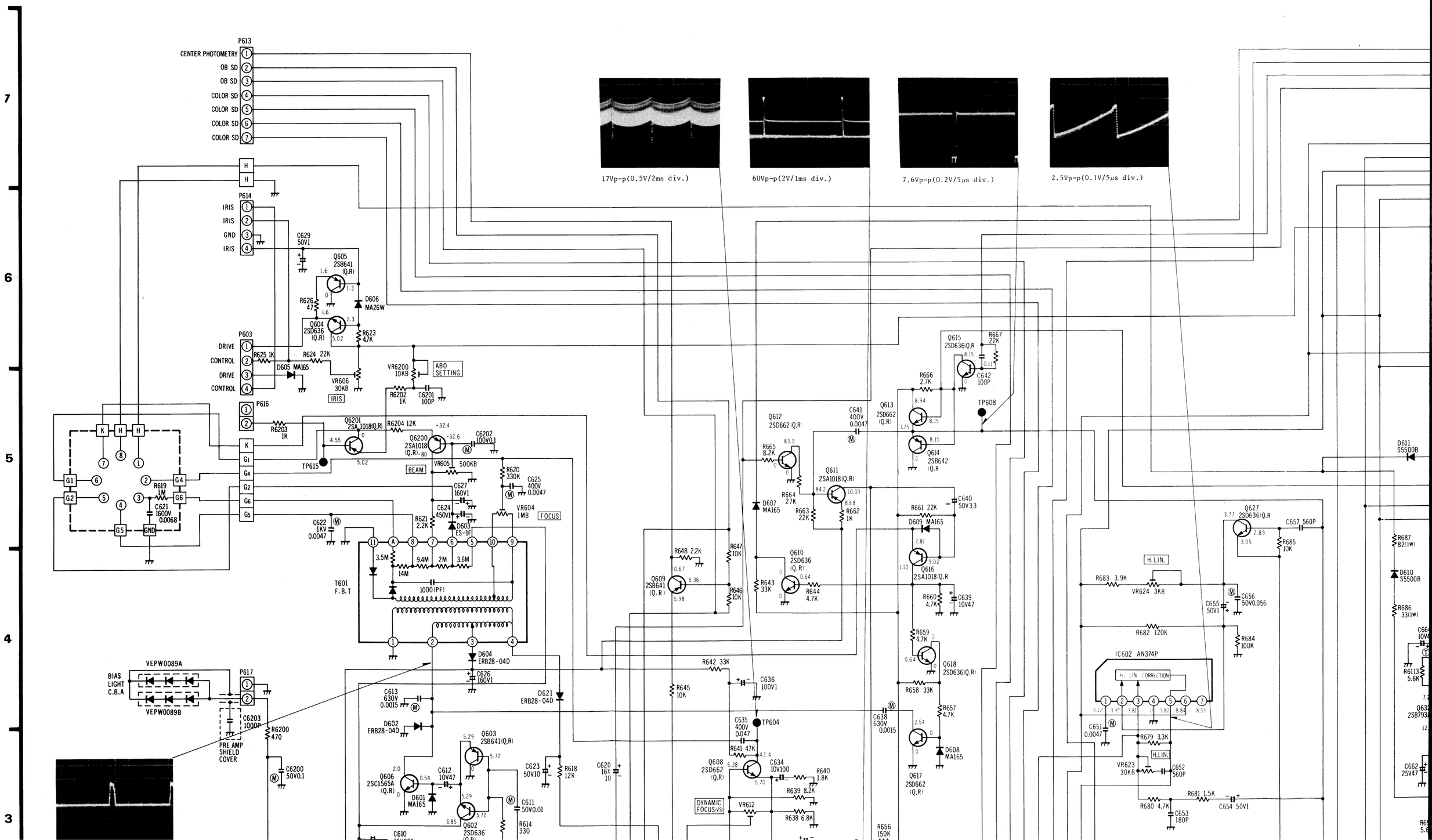

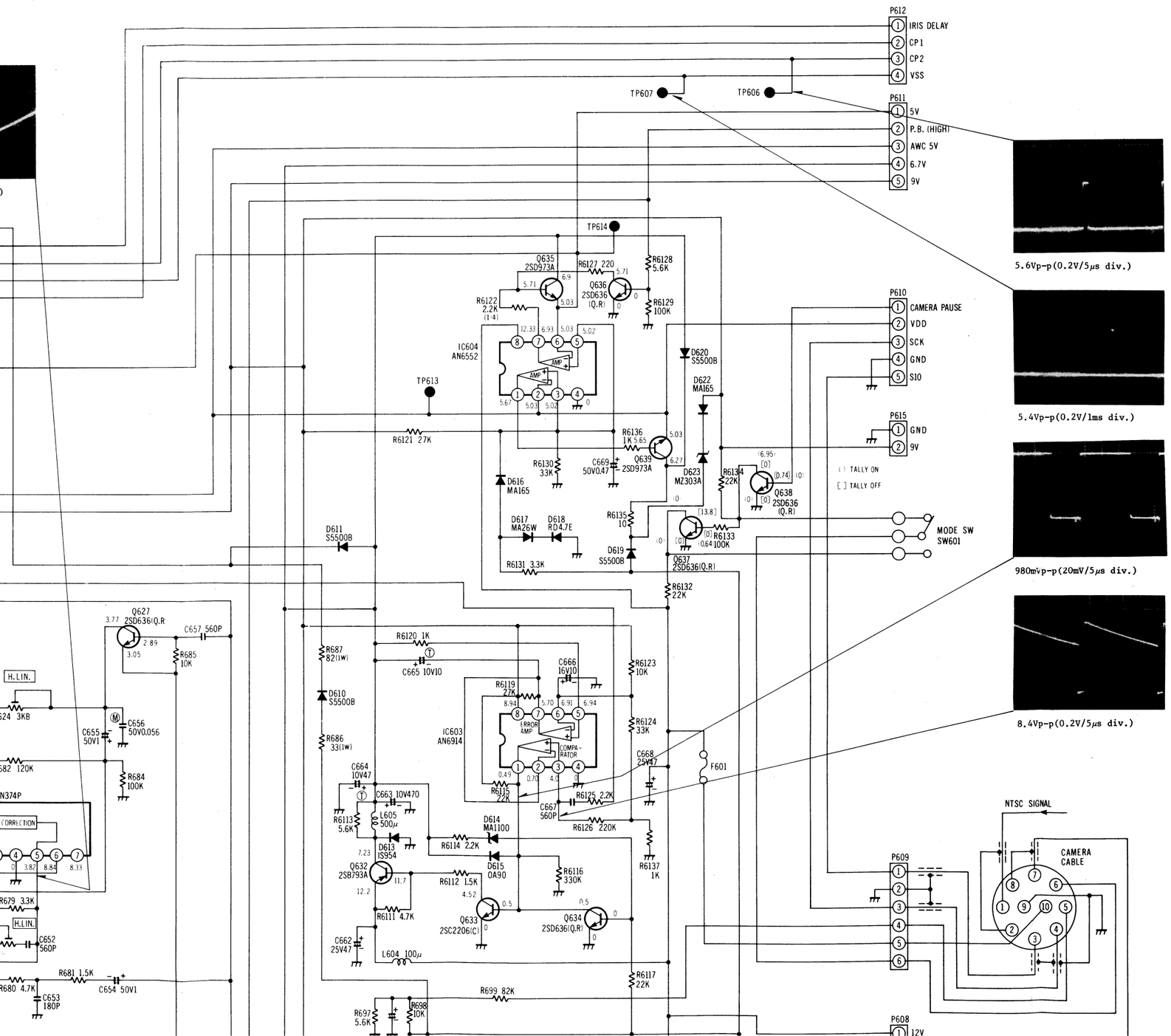


5.6Vp-p(0.2V/5μs div.)

5.4Vp-p(0.2V/1ms div.)

980mVp-p(20mV/5μs div.)

8.4Vp-p(0.2V/5μs div.)

| | | |
|---|---|---|
| VR601 | TARGET CONTROL | B−2 |
| VR602 | V. SIZE | C−2 |
| VR603 | V−CENTERING | B−2 |
| VR604 | FOCUS | C−5 |
| VR605 | BEAM | C−5 |
| VR606 | IRIS | B−5 |
| VR607 | DARK SHADING | D−2 |
| VR608 | DARK SHADING | D−2 |
| VR609 | DYNAMIC FOCUS | D−2 |
| VR610 | DYNAMIC FOCUS | D−3 |
| VR611 | DYNAMIC FOCUS | D−3 |
| VR612 | DYNAMIC FOCUS | D−3 |
| VR613 | COLOR SHADING | F−1 |
| VR614 | COLOR SHADING | F−2 |
| VR615 | COLOR SHADING | F−2 |
| VR616 | COLOR SHADING | F−2 |
| VR617 | COLOR SHADING | F−2 |
| VR618 | COLOR SHADING | F−2 |
| VR619 | COLOR SHADING | F−3 |
| VR620 | COLOR SHADING | F−3 |
| VR621 | H−CENTERING | G−3 |
| VR622 | H. SIZE | G−2 |
| VR623 | H. LIN. | G−3 |
| VR624 | H. LIN. | G−4 |
| VR625 | 9V ADJ. | H−1 |
| VR6200 | ABO SET. | C−5 |

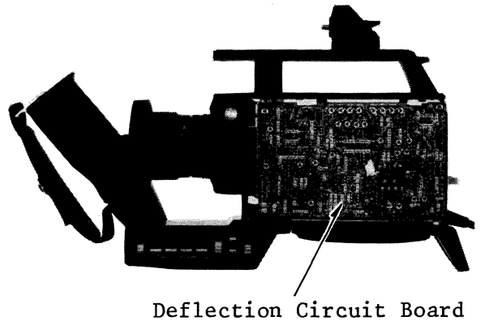

Deflection Circuit Board

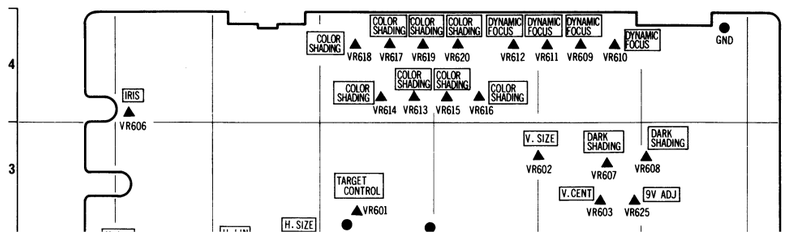

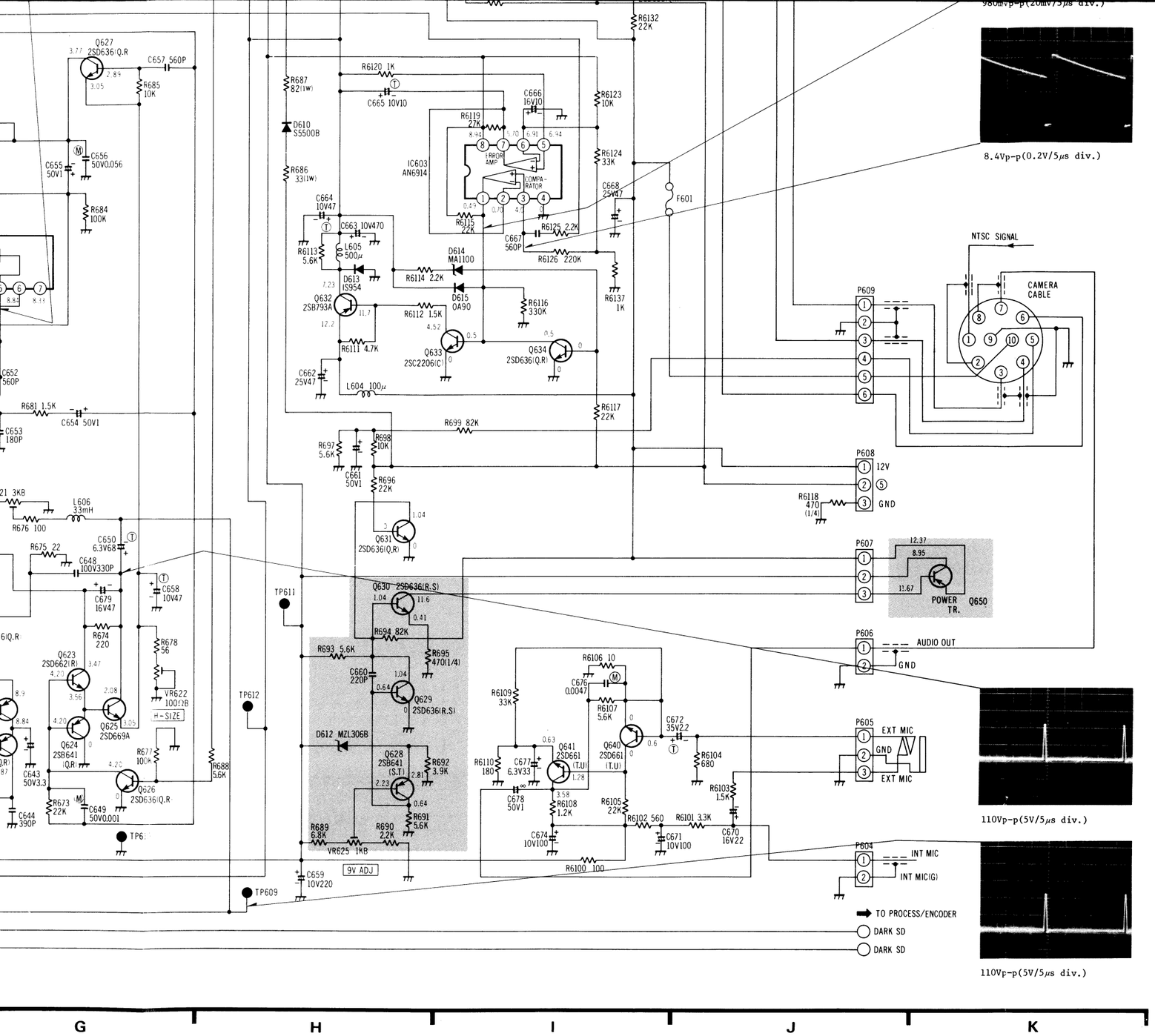


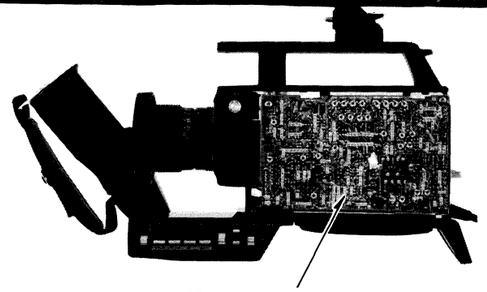

Deflection Circuit Board

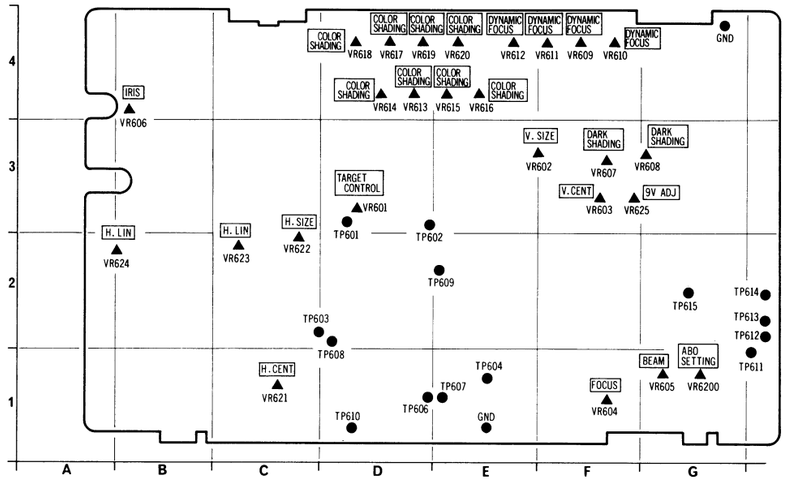


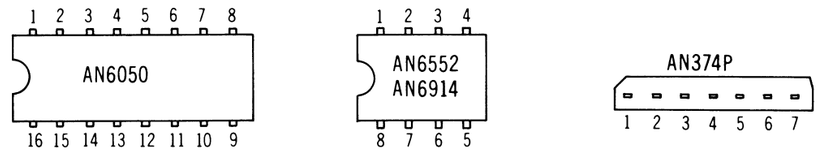


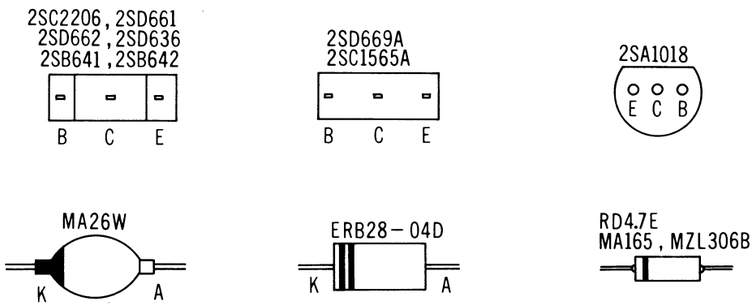





**PRODUCT SAFETY NOTE**

The shaded area on this schematic diagram incorporates special features important for protection from X-Radiation, fire and electrical shock hazards when servicing it is essential that only manufacturer's specified parts be used for the critical components in the shaded areas of the schematic.

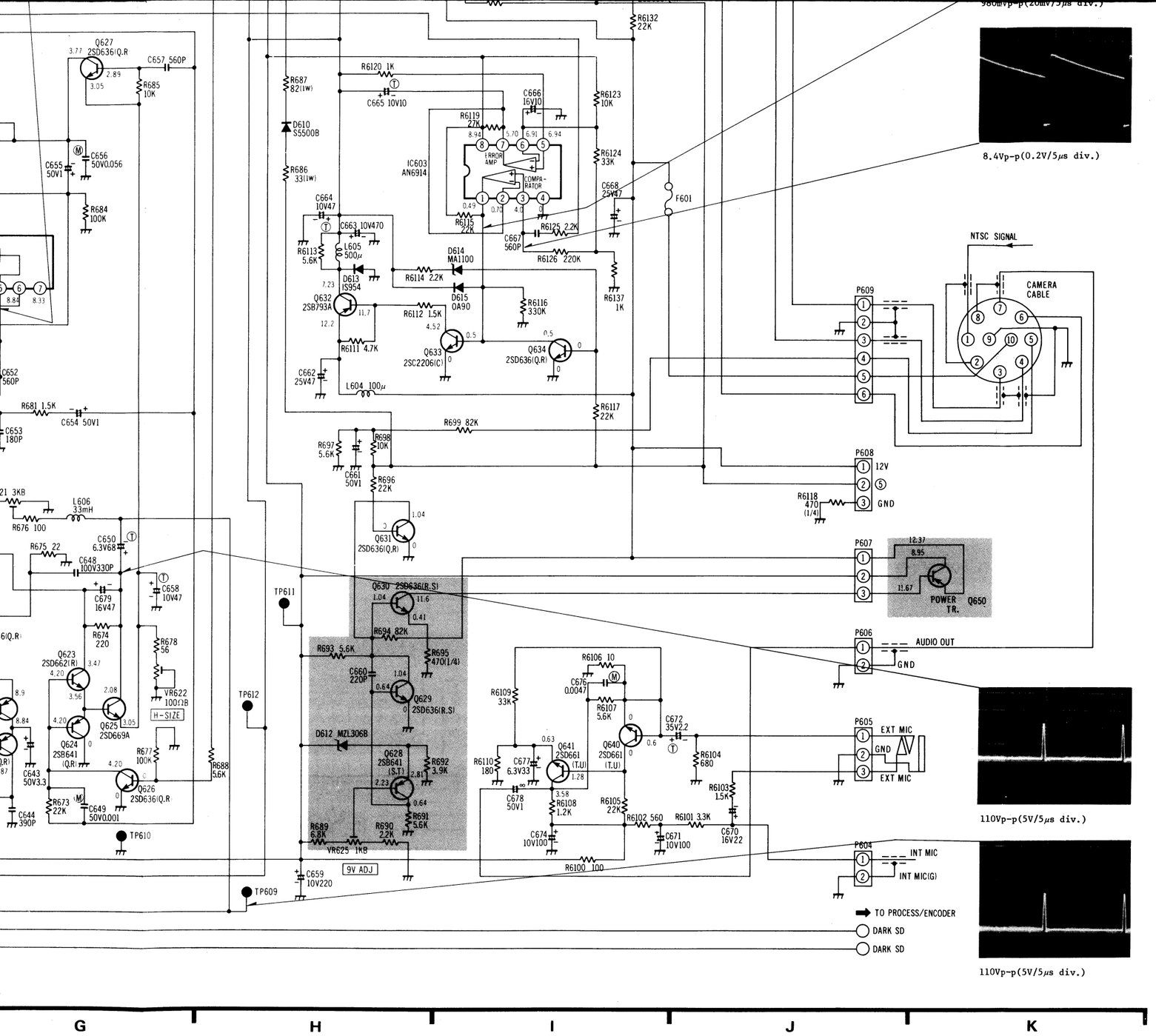


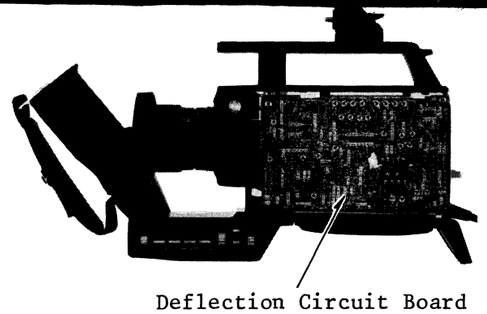

Deflection Circuit Board

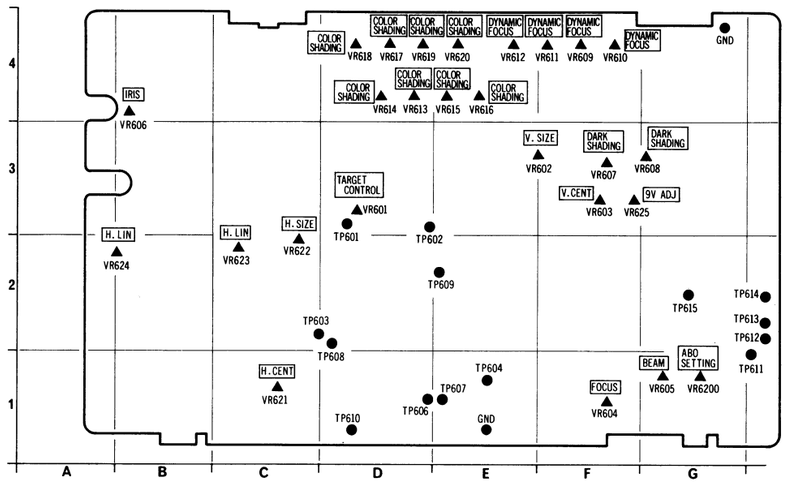


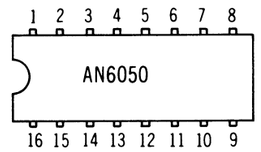


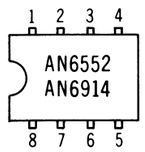


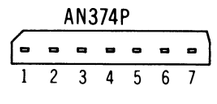


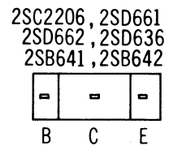


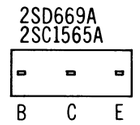

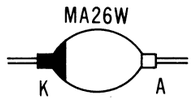


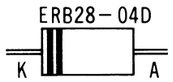


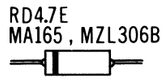


**PRODUCT SAFETY NOTE**

The shaded area on this schematic diagram incorporates special features important for protection from X-Radiation, fire and electrical shock hazards when servicing it is essential that only manufacturer's specified parts be used for the critical components in the shaded areas of the schematic.

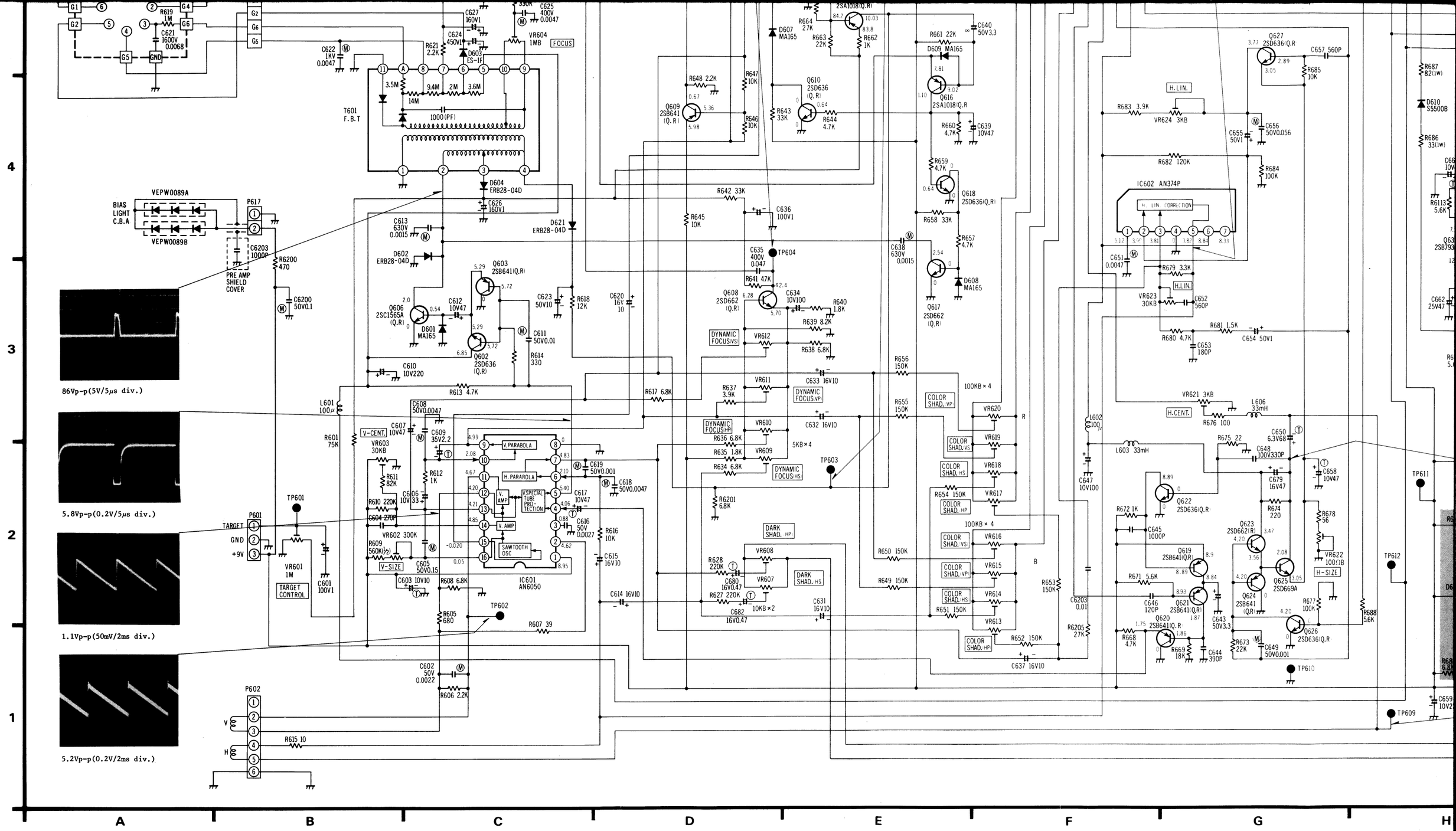
86Vp-p(5V/5μs div.)
5.8Vp-p(0.2V/5μs div.)
1.1Vp-p(50mV/2ms div.)
5.2Vp-p(0.2V/2ms div.)
IC601 AN6050
IC602 AN374P
T601 F.B.T
VEPW0089A
VEPW0089B
BIAS LIGHT C.B.A
PRE AMP SHIELD COVER
TARGET CONTROL
V-CENT.
V-SIZE
H-SIZE
H.LIN.
H.CENT.
FOCUS
DYNAMIC FOCUS VS
DYNAMIC FOCUS VP
DYNAMIC FOCUS HP
DYNAMIC FOCUS HS
COLOR SHAD. VP
COLOR SHAD. VS
COLOR SHAD. HS
COLOR SHAD. HP
DARK SHAD. HP
DARK SHAD. HS
V. PARABOLA
H. PARAROLA
V. AMP
V. SPECIAL TUBE PROTECTION
SAWTOOTH OSC
H. LIN. CORRECTION
100KB × 4
5KB × 4
10KB × 2
A
B
C
D
E
F
G
H
1
2
3
4

# DEFLECTION CIRCUIT BOARD (VEPW0108A)

| | |
|---|---|
| IC601 | E-3 |
| IC602 | B-3 |
| IC603 | B-3 |
| IC604 | G-4 |
| Q602 | F-3 |
| Q603 | F-3 |
| Q604 | B-3 |
| Q605 | B-3 |
| Q606 | E-2 |
| Q608 | E-4 |
| Q609 | F-4 |
| Q610 | E-2 |
| Q611 | D-1 |
| Q612 | D-1 |
| Q613 | D-1 |
| Q614 | D-1 |
| Q615 | D-1 |
| Q616 | D-2 |
| Q617 | E-2 |
| Q618 | D-2 |
| Q619 | D-3 |
| Q620 | D-3 |
| Q621 | D-3 |
| Q622 | C-3 |
| Q623 | C-2 |
| Q624 | C-2 |
| Q625 | C-2 |
| Q626 | B-2 |
| Q627 | B-3 |
| Q628 | G-3 |
| Q629 | G-3 |
| Q630 | G-3 |
| Q631 | F-3 |
| Q632 | C-4 |
| Q633 | C-3 |
| Q634 | C-3 |
| Q635 | G-4 |
| Q636 | G-4 |
| Q637 | C-1 |
| Q638 | D-1 |
| Q639 | G-4 |
| Q640 | B-2 |
| Q641 | B-2 |
| Q6200 | G-2 |
| Q6201 | G-2 |
| VR601 | D-3 |
| VR602 | E-3 |
| VR603 | F-3 |
| VR604 | F-1 |
| VR605 | G-1 |
| VR606 | B-4 |
| VR607 | F-3 |
| VR608 | G-3 |
| VR609 | F-4 |
| VR610 | F-4 |
| VR611 | F-4 |
| VR612 | E-4 |
| VR613 | D-4 |
| VR614 | D-4 |
| VR615 | E-4 |
| VR616 | E-4 |
| VR617 | D-4 |
| VR618 | D-4 |
| VR619 | D-4 |
| VR620 | E-4 |
| VR621 | C-1 |
| VR622 | C-2 |
| VR623 | C-2 |
| VR624 | A-2 |
| VR625 | F-3 |
| VR6200 | G-1 |

| P601 | |
|---|---|
| 1 | TARGET |
| 2 | GND |
| 3 | +9V |

| P602 | |
|---|---|
| 1 | THERMISTOR |
| 2 | V COIL |
| 3 | V COIL |
| 4 | H COIL |
| 5 | H COIL |
| 6 | GND |

| P603 | |
|---|---|
| 1 | DRIVE |
| 2 | CONTROL |
| 3 | DRIVE |
| 4 | CONTROL |

| P604 | |
|---|---|
| 1 | INT MIC |
| 2 | INT MIC |

| P605 | |
|---|---|
| 1 | EXT MIC |
| 2 | GND |
| 3 | EXT MIC |

| P606 | |
|---|---|
| 1 | AUDIO OUT |
| 2 | GND |

| P607 | |
|---|---|
| 1 | Q650 (E) |
| 2 | Q650 (C) |
| 3 | Q650 (B) |

| P608 | |
|---|---|
| 1 | 12V |
| 2 | ⑤ |
| 3 | GND |

| P609 | |
|---|---|
| 1 | REMO. CON. |
| 2 | GND |
| 3 | REMO. CON. |
| 4 | STANDBY |
| 5 | +12V |
| 6 | PAUSE SIGNAL |

| P610 | |
|---|---|
| 1 | CAMERA PAUSE |
| 2 | VDD |
| 3 | SCK |
| 4 | GND |
| 5 | SIO |

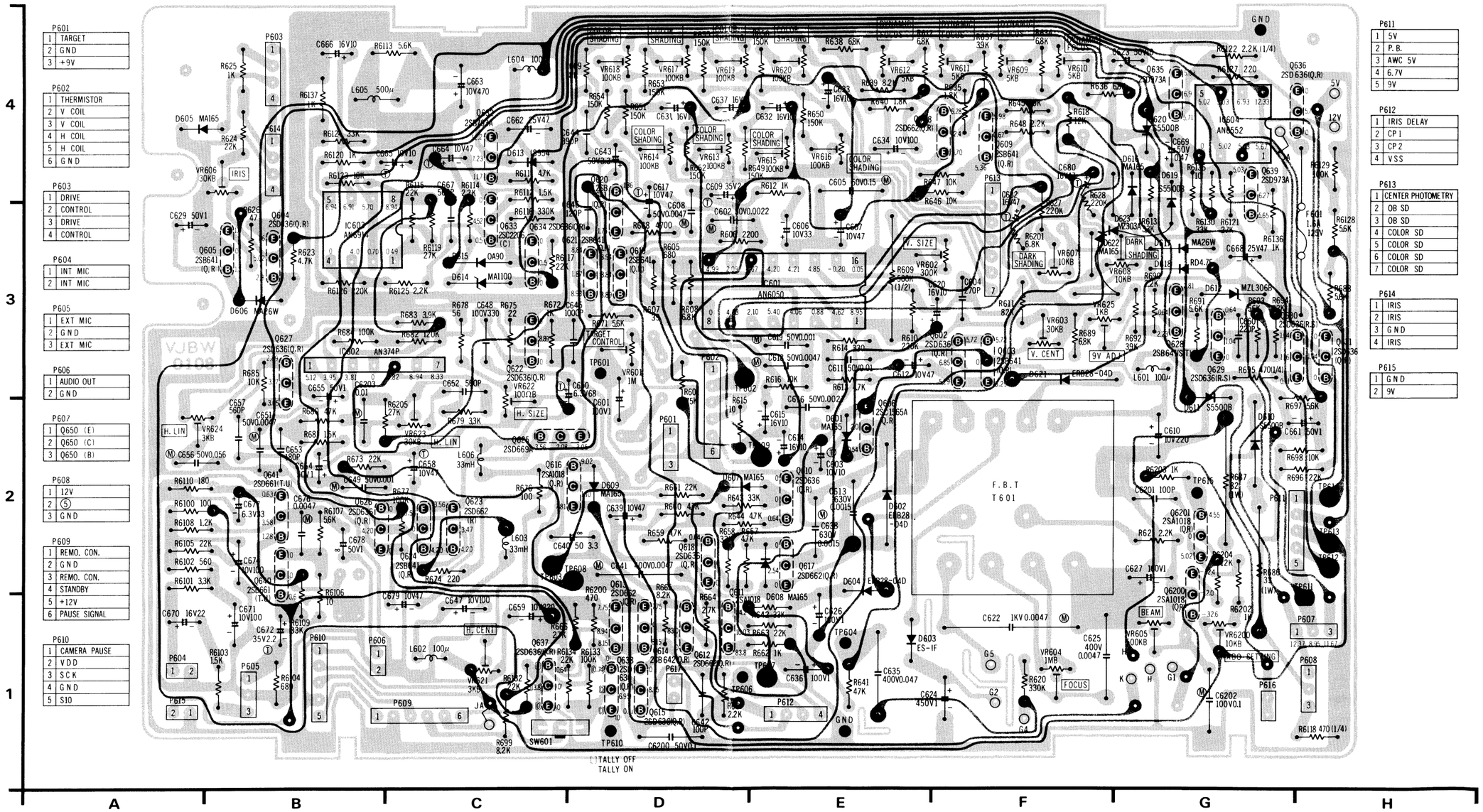


| P611 | |
|---|---|
| 1 | 5V |
| 2 | P.B. |
| 3 | AWC 5V |
| 4 | 6.7V |
| 5 | 9V |

| P612 | |
|---|---|
| 1 | IRIS DELAY |
| 2 | CP I |
| 3 | CP 2 |
| 4 | VSS |

| P613 | |
|---|---|
| 1 | CENTER PHOTOMETRY |
| 2 | OB SD |
| 3 | OB SD |
| 4 | COLOR SD |
| 5 | COLOR SD |
| 6 | COLOR SD |
| 7 | COLOR SD |

| P614 | |
|---|---|
| 1 | IRIS |
| 2 | IRIS |
| 3 | GND |
| 4 | IRIS |

| P615 | |
|---|---|
| 1 | GND |
| 2 | 9V |

# REAR SIDE SCHEMATIC DIAGRAM

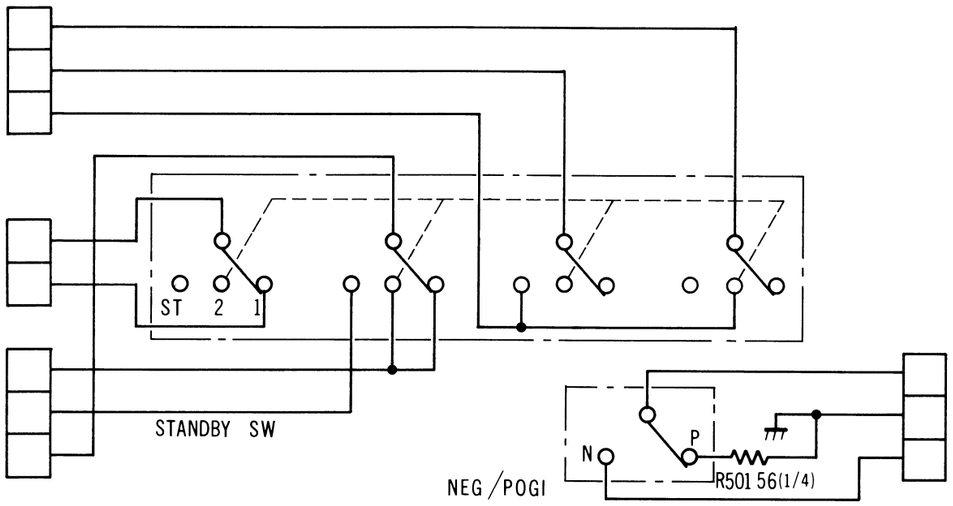


## REAR SIDE CIRCUIT BOARD (VEPW0110)

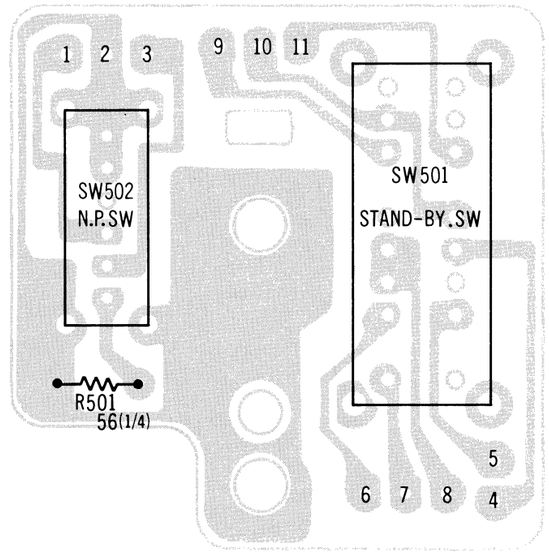


## SPECIAL TUBE SOCKET CIRCUIT BOARD (VEPW0124)

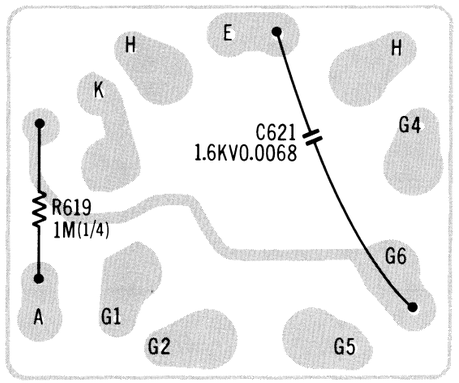


## FRONT CIRCUIT BOARD (VEPW0113)

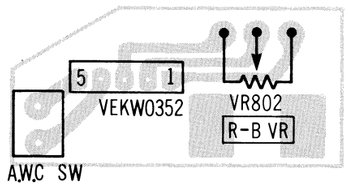


## REMOTE CONTROL SW CIRCUIT BOARD (VEPW0111)

# POWER ZOOM SW SCHEMATIC DIAGRAM

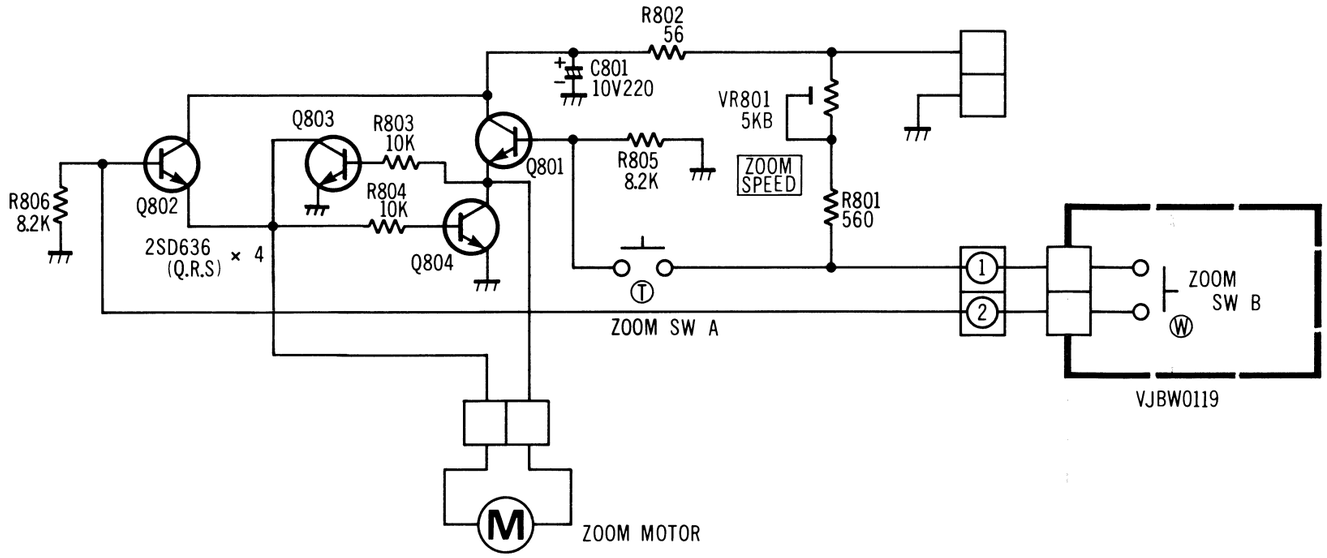


## POWER ZOOM SW (B) CIRCUIT BOARD (VEPW0119)

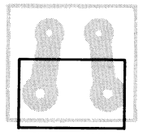


## POWER ZOOM SW (A) CIRCUIT BOARD (VEPW0112)

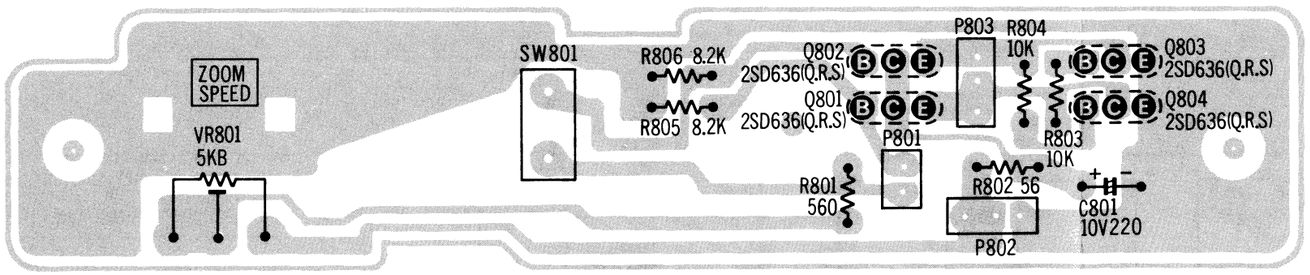


## BIAS LIGHT CIRCUIT BOARD

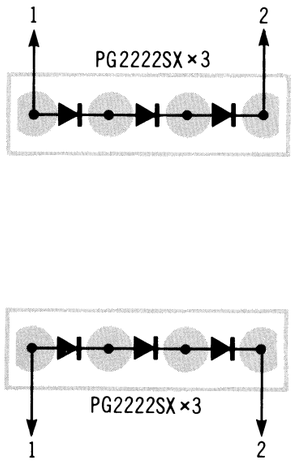

# CAMERA REMOTE CONTROL (S) SCHEMATIC DIAGRAM

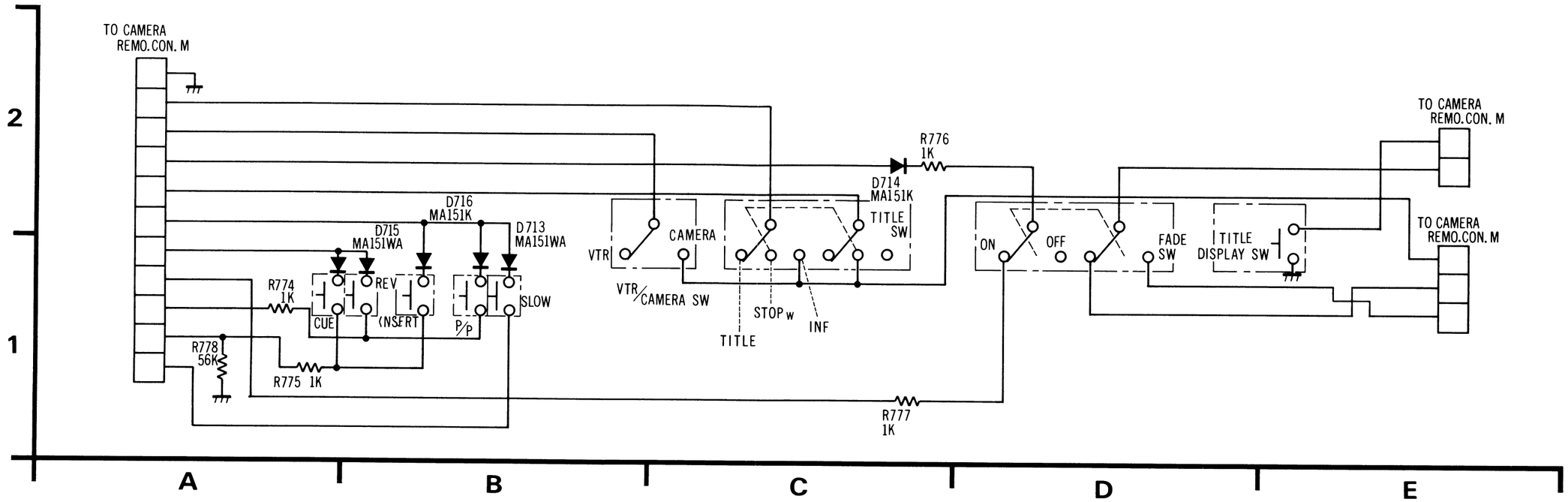


# CAMERA REMOTE CONTROL (S) CIRCUIT BOARD (VEPW0116)

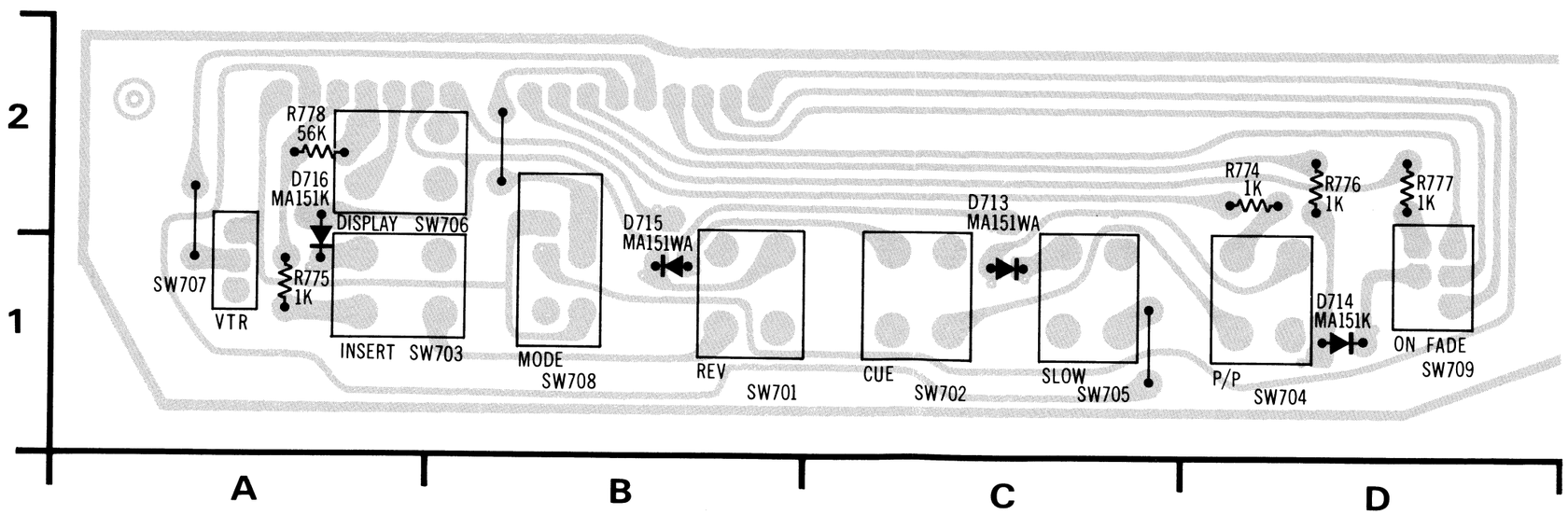

# CAMERA REMOTE CONTROL (H) SCHEMATIC DIAGRAM

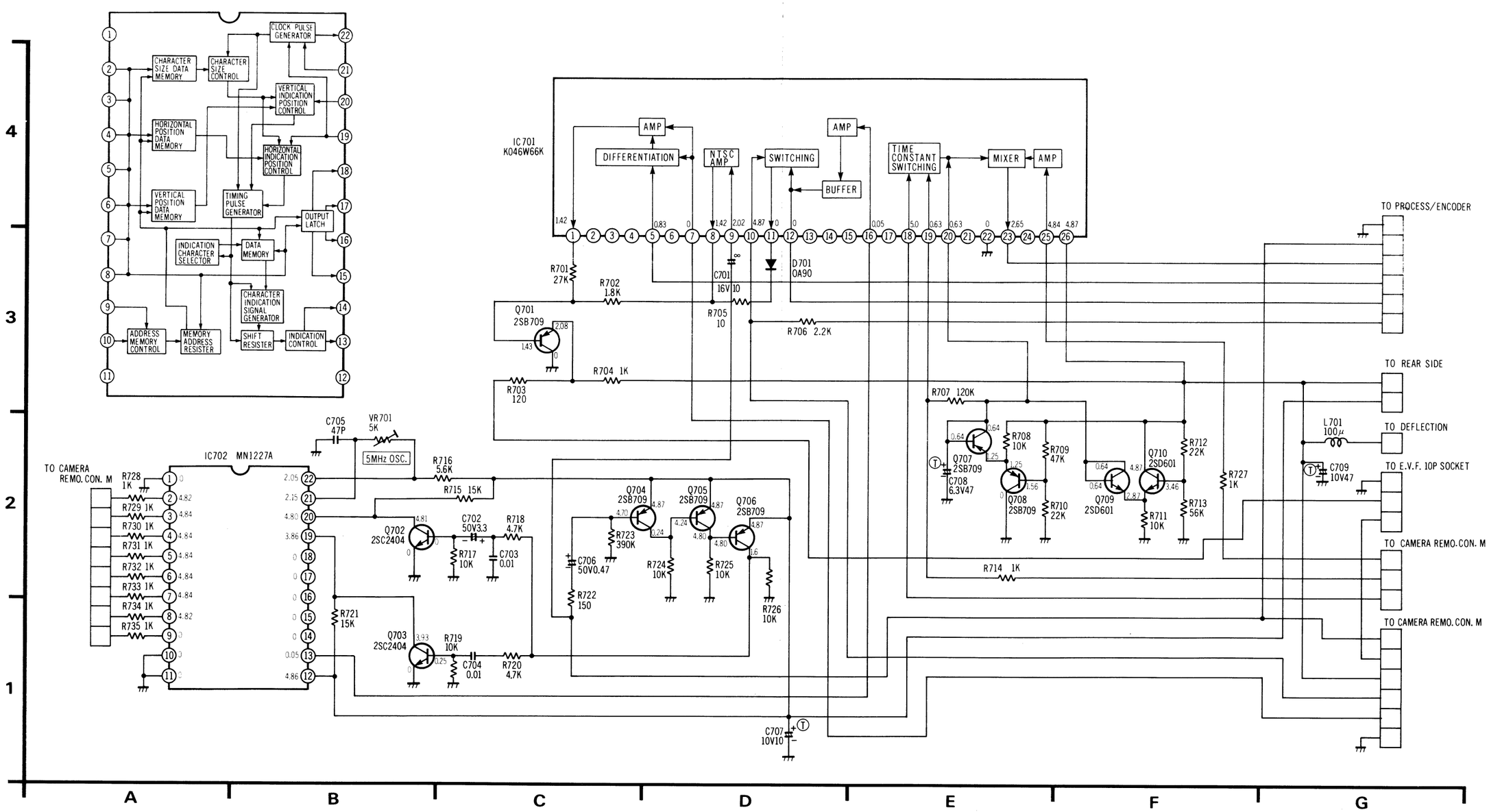


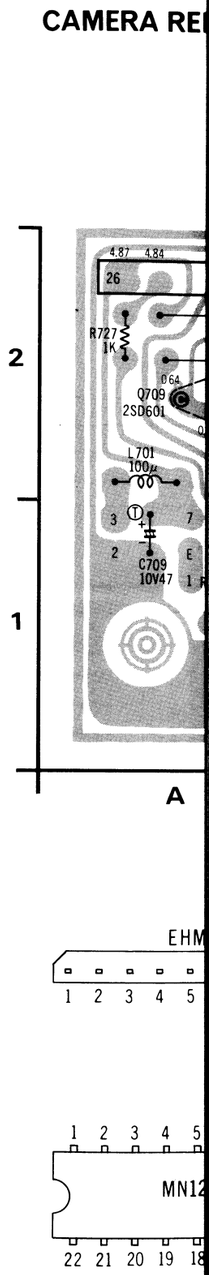

# TIC DIAGRAM

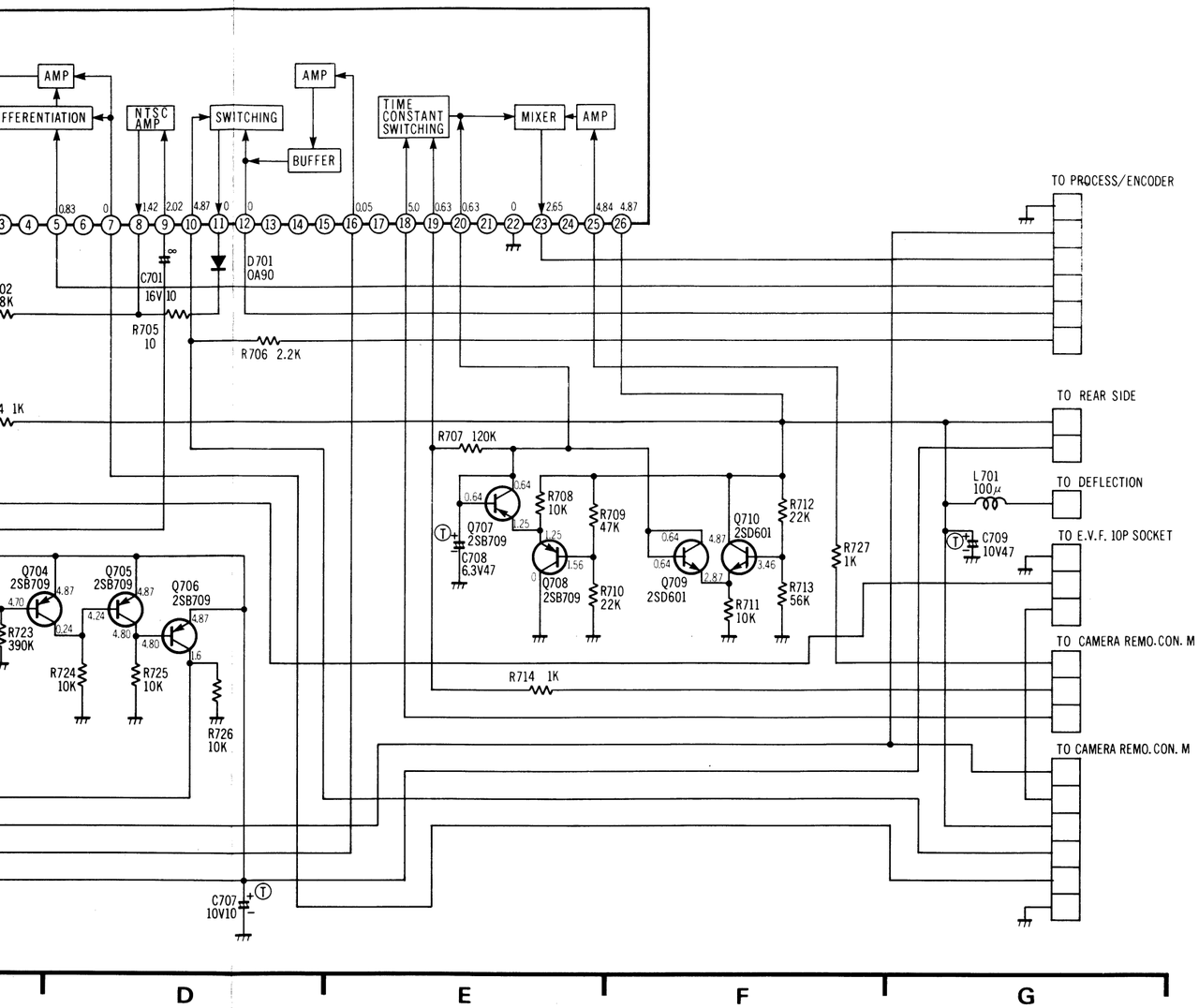


## CAMERA REMOTE CONTROL (H) CIRCUIT BOARD (VEPW0114)

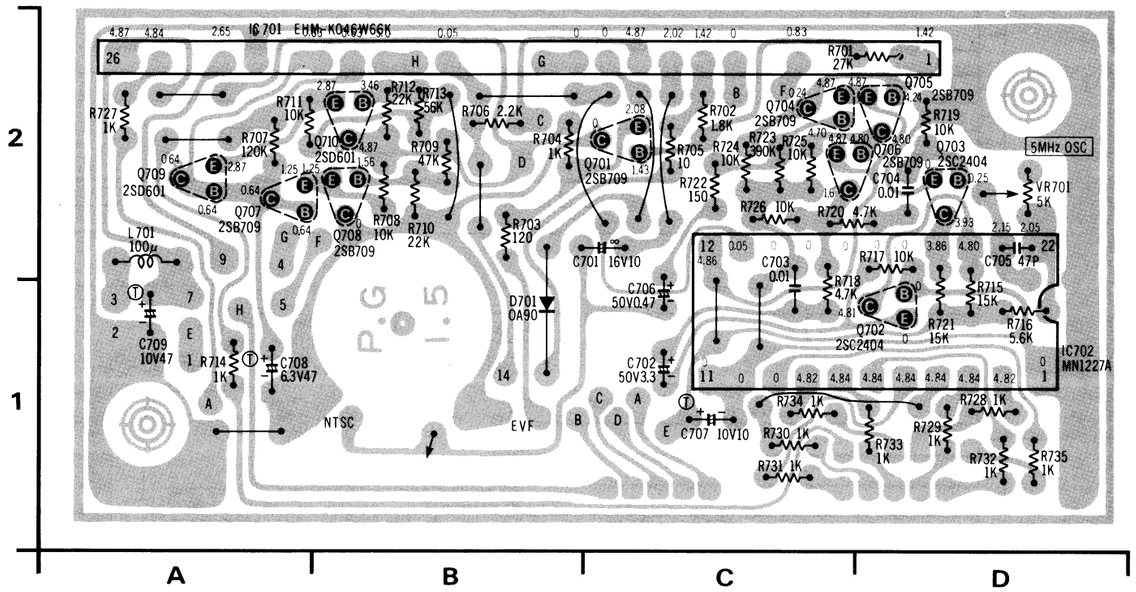


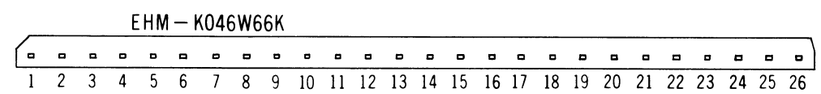


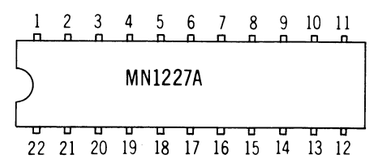


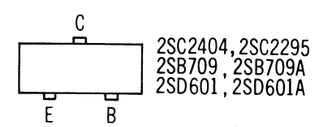


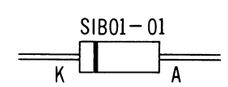

# CAMERA REMOTE CONTROL (M) SCHEMATIC DIAGRAM

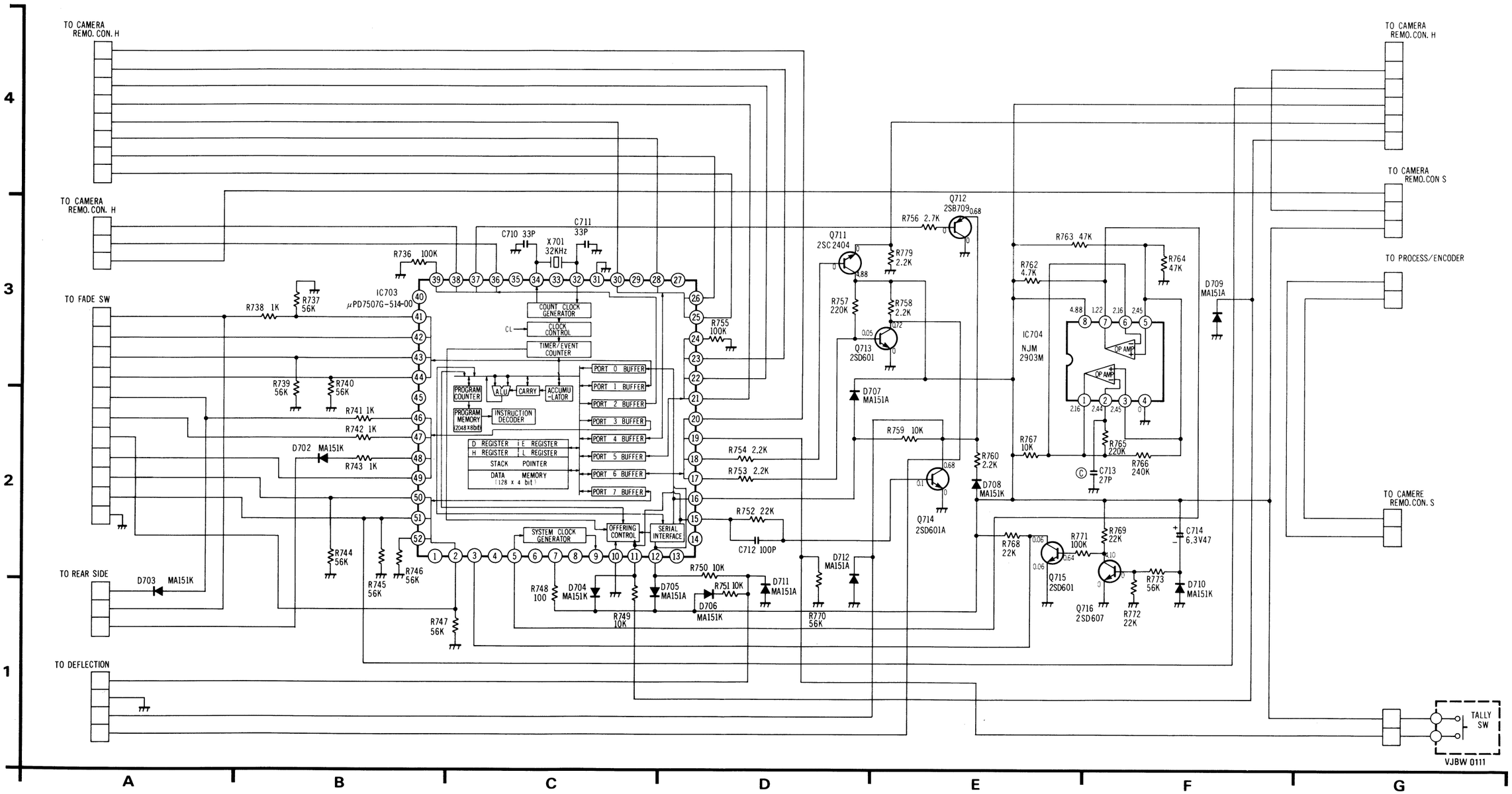


| PIN NO. | MODE |
|---|---|
| 1 | 0.3 |
| 2 | 0 |
| 3 | 0 |
| 4 | 0.3 |
| 5 | 1.17 |
| 6 | 0.45 |
| 7 | 4.85 |
| 8 | — |
| 9 | — |
| 10 | 0 |
| 11 | 0 |
| 12 | −0.03 |
| 13 | — |
| 14 | — |
| 15 | 0.16 |

# IC DIAGRAM

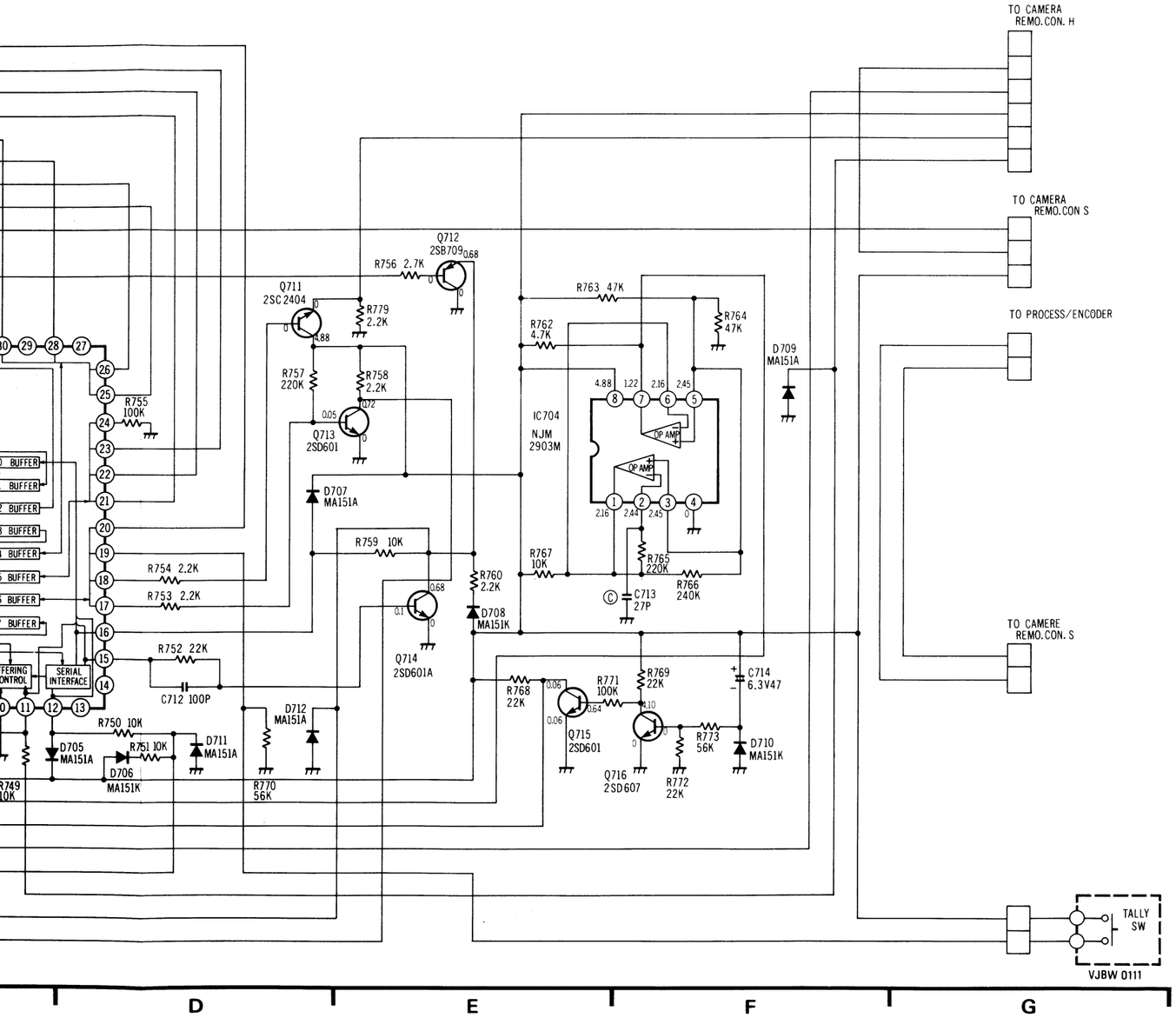


## CAMERA REMOTE CONTROL (M) CIRCUIT BOARD (VEPW0115)

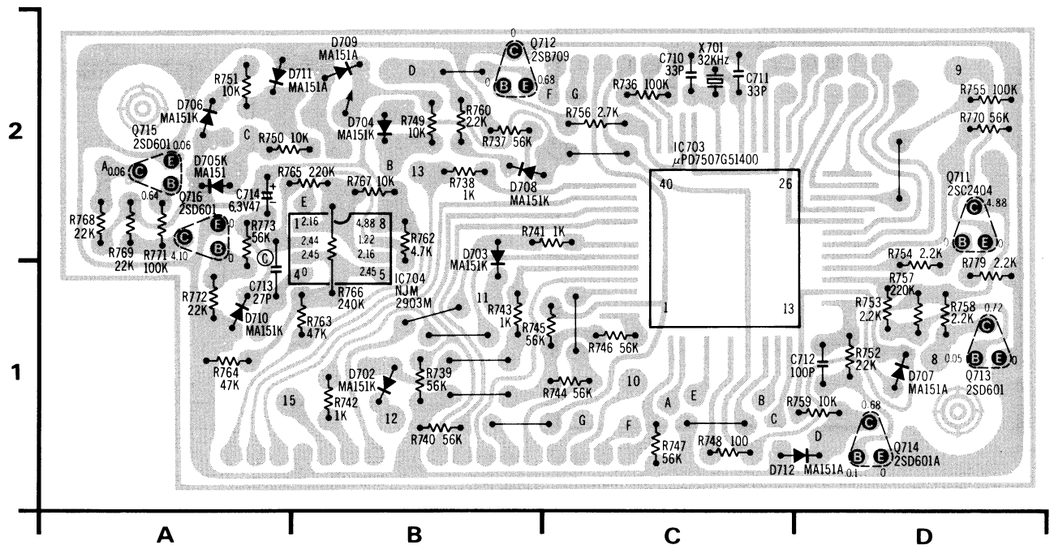


| PIN NO. | IC703 MODE | IC703 STOP WATCH | IC703 INFOR-MATION | PIN NO. | IC703 MODE | IC703 STOP WATCH | IC703 INFOR-MATION | PIN NO. | IC703 MODE | IC703 STOP WATCH | IC703 INFOR-MATION | PIN NO. | IC703 MODE | IC703 STOP WATCH | IC703 INFOR-MATION |
|---|---|---|---|---|---|---|---|---|---|---|---|---|---|---|---|
| 1 | 0.3 | 0.1 | 0.29 | 16 | 0.68 | 0.68 | 0.68 | 31 | 0 | 0 | 0 | 46 | 4.68 | 4.70 | 4.67 |
| 2 | 0 | 4.87 | 0.04 | 17 | 0 | 0 | 0 | 32 | 2.30 | 2.30 | 2.30 | 47 | 4.67 | 4.67 | 4.67 |
| 3 | 0 | 0 | 0 | 18 | 0 | 0 | 0 | 33 | — | — | — | 48 | 0 | 0 | 0 |
| 4 | 0.3 | 0 | 0 | 19 | 0 | 0 | 0 | 34 | 2.28 | 2.28 | 2.28 | 49 | 0.15 | 0.15 | 0.15 |
| 5 | 1.17 | 1.17 | 1.17 | 20 | 0 | 0.2 | 0 | 35 | — | — | — | 50 | 0 | 0 | 0 |
| 6 | 0.45 | 0.15 | 0.45 | 21 | 0 | 0.2 | 4.84 | 36 | 0 | 0 | 0 | 51 | 0.18 | 0.18 | 4.87 |
| 7 | 4.85 | 4.85 | 4.85 | 22 | 0 | 4.55 | 4.84 | 37 | 0 | 0 | 0 | 52 | 0 | 0 | 0 |
| 8 | — | — | — | 23 | 0 | 0.14 | 4.82 | 38 | 4.85 | 4.85 | 4.85 | | | | |
| 9 | — | — | — | 24 | 0 | 0.11 | 4.81 | 39 | 4.84 | 4.84 | 4.84 | | | | |
| 10 | 0 | 0 | 0 | 25 | 0 | 0.12 | 4.82 | 40 | — | — | — | | | | |
| 11 | 0 | 0 | 0 | 26 | 0 | 0.3 | 4.14 | 41 | 0 | 0 | 0 | | | | |
| 12 | −0.03 | −0.03 | −0.03 | 27 | — | — | — | 42 | 0 | 0 | 0 | | | | |
| 13 | — | — | — | 28 | 0 | 0.25 | 4.84 | 43 | 0 | 0 | 0 | | | | |
| 14 | — | — | — | 29 | — | — | — | 44 | 0 | 0 | 0 | | | | |
| 15 | 0.16 | 0.16 | 0.16 | 30 | 0 | 0.3 | 4.84 | 45 | 0.12 | 0.10 | 0.10 | | | | |

# ELECTRONIC VIEWFINDER SCHEMATIC DIAGRAM

**PRODUCT SAFETY NOTE**

The shaded area on this schematic diagram incorporates spec
for protection from X-Radiation, fire and electrical shock haz
is essential that only manufacturer's specified parts be used f
nents in the shaded areas of the schematic.

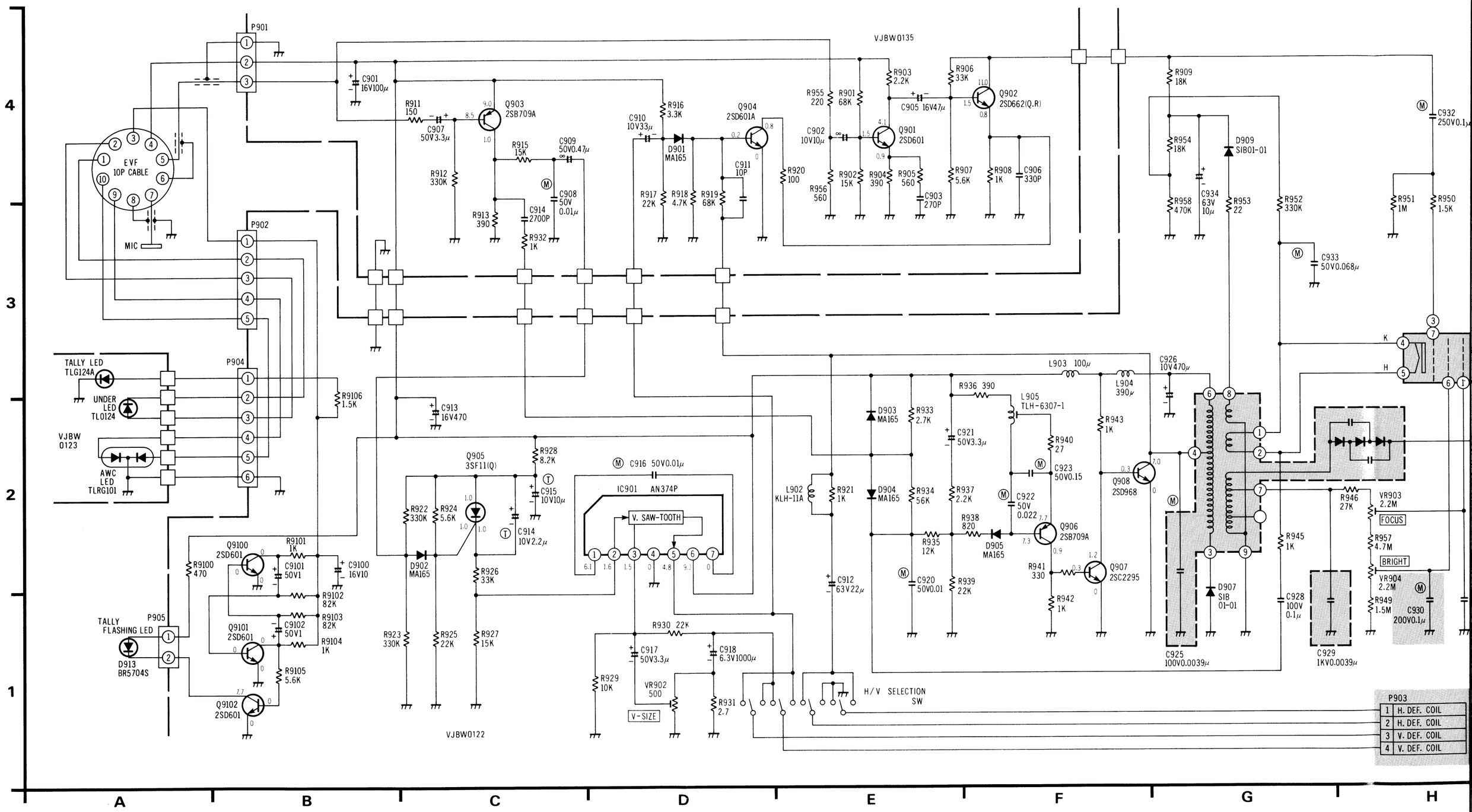

**PRODUCT SAFETY NOTE**

The shaded area on this schematic diagram incorporates special features important for protection from X-Radiation, fire and electrical shock hazards when servicing it is essential that only manufacturer's specified parts be used for the critical components in the shaded areas of the schematic.

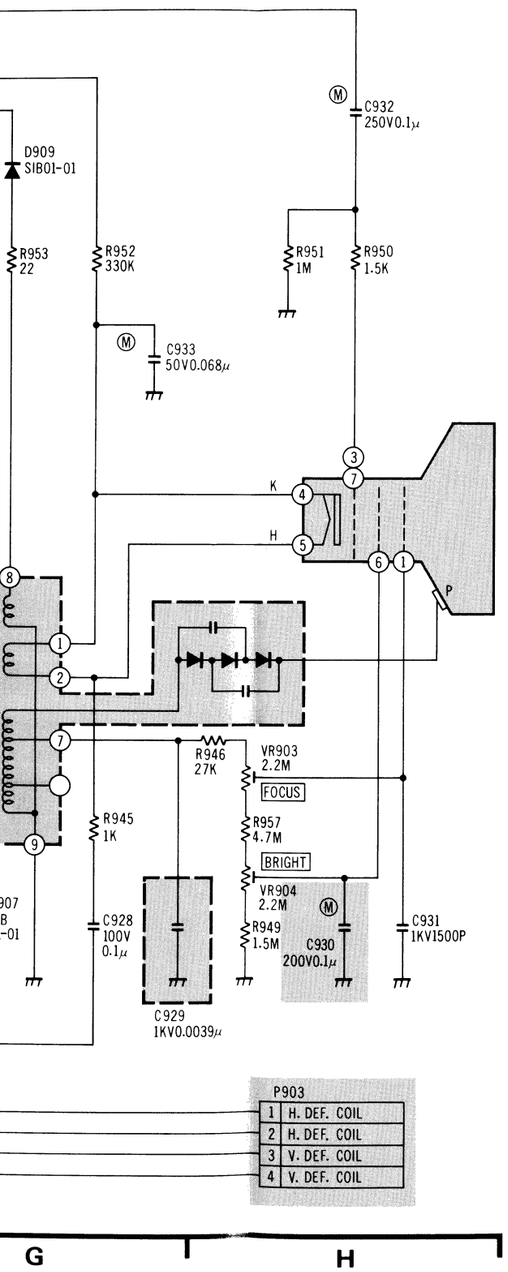


# ELECTRONIC VIEWFINDER (A) CIRCUIT BOARD (VEPW0122)

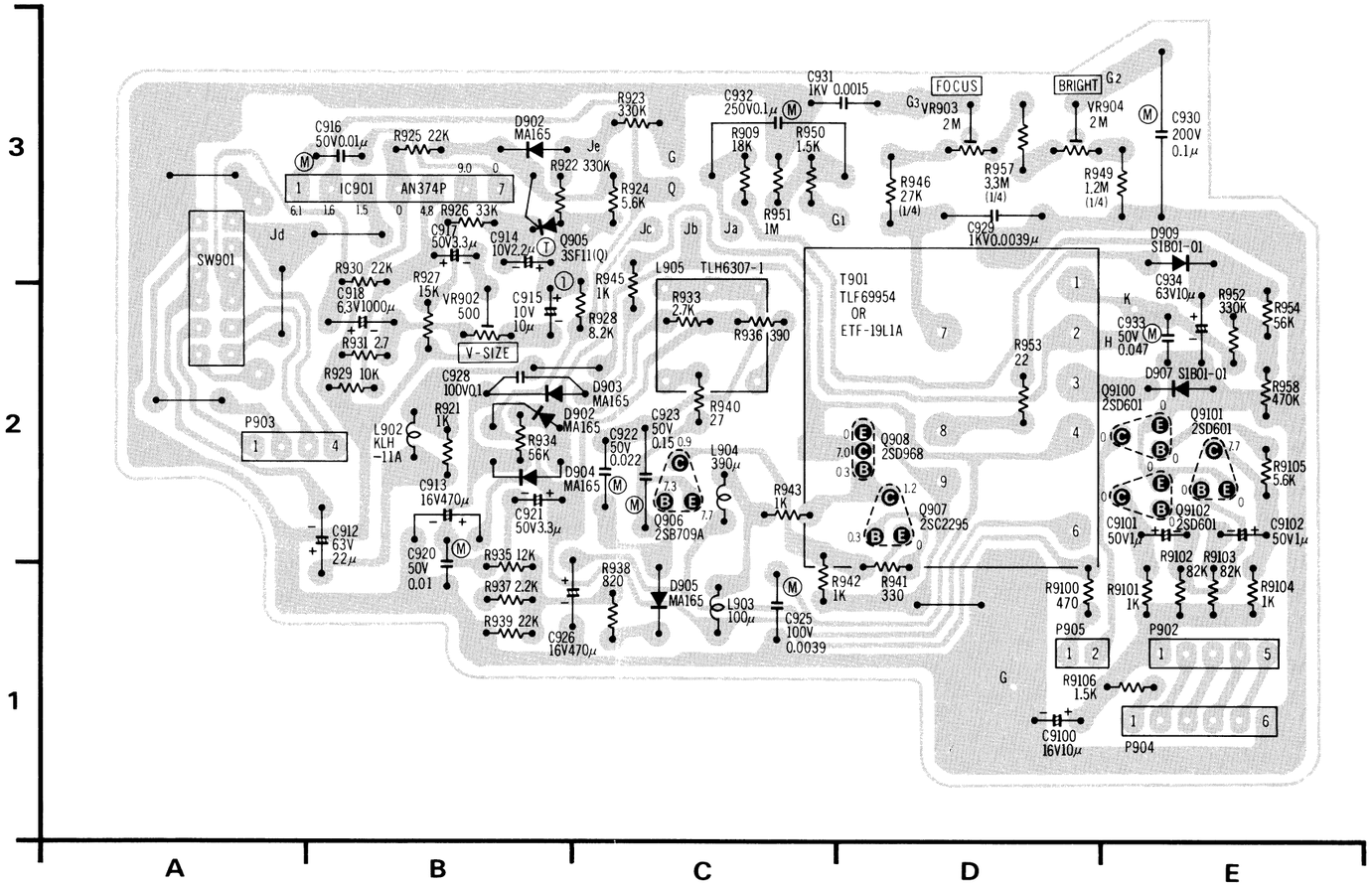


## ELECTRONIC VIEWFINDER (B) CIRCUIT BOARD (VEPW0135)

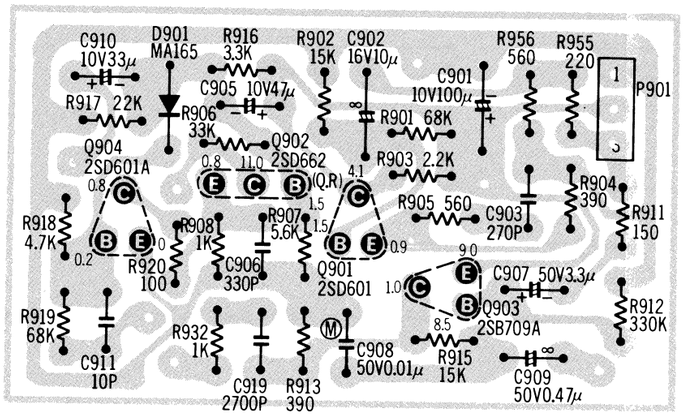


## EVF LED CIRCUIT BOARD (VEPW0123)

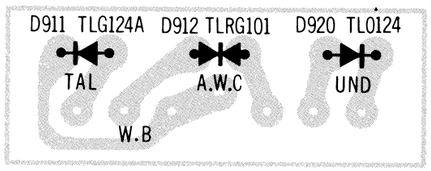

# ELECTRONIC VIEWFINDER INTERCONNECTION SCHEMATIC DIAGRAM

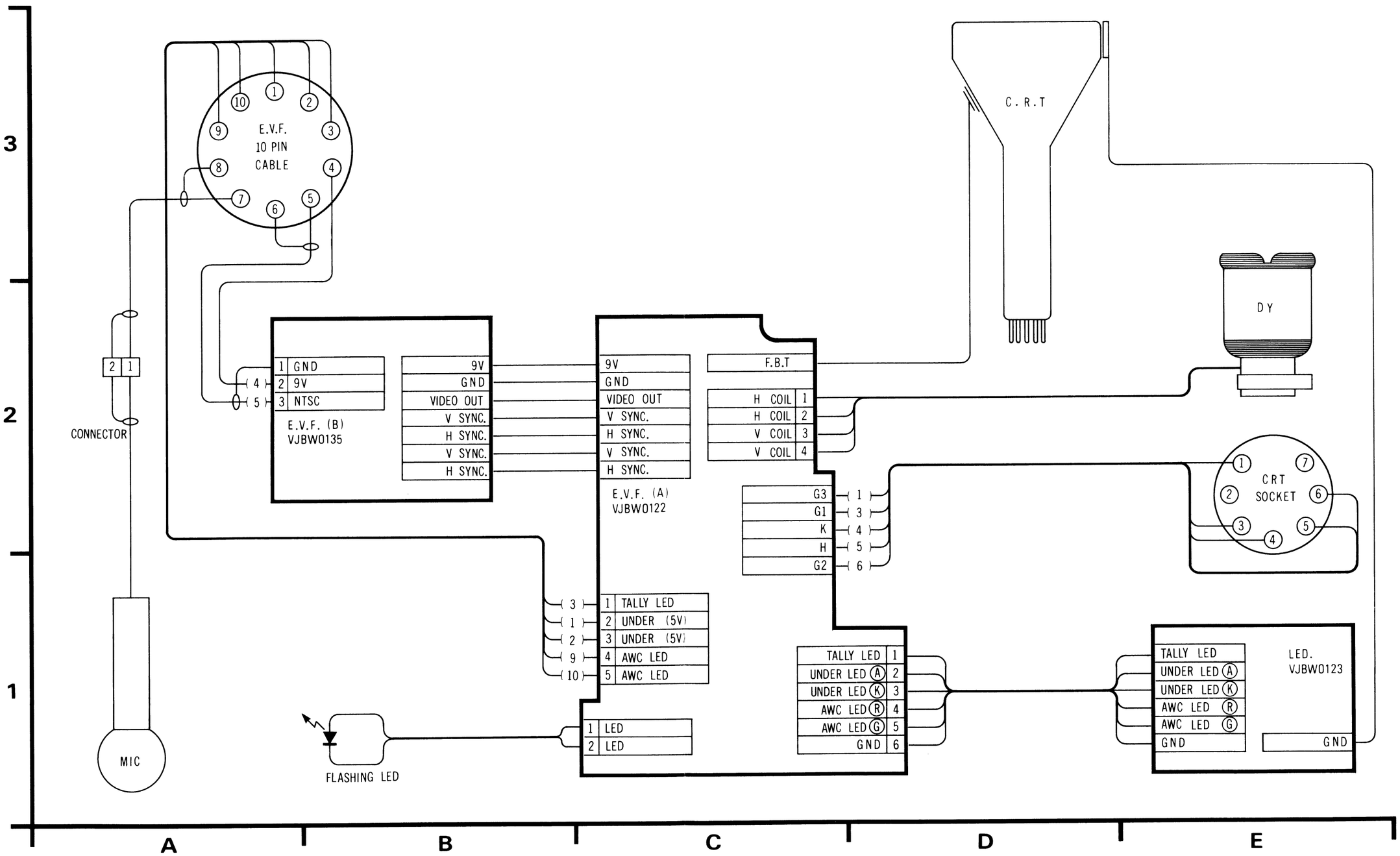


## POWER
(OPTIONAL

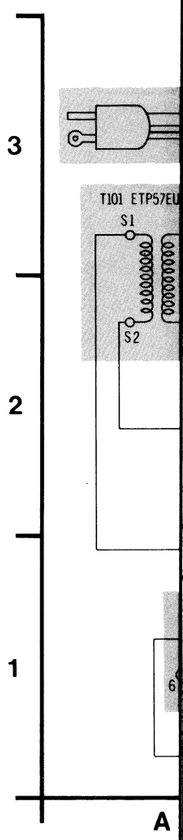

# POWER SUPPLY SCHEMATIC DIAGRAM
## (OPTIONAL ACCESSORY)

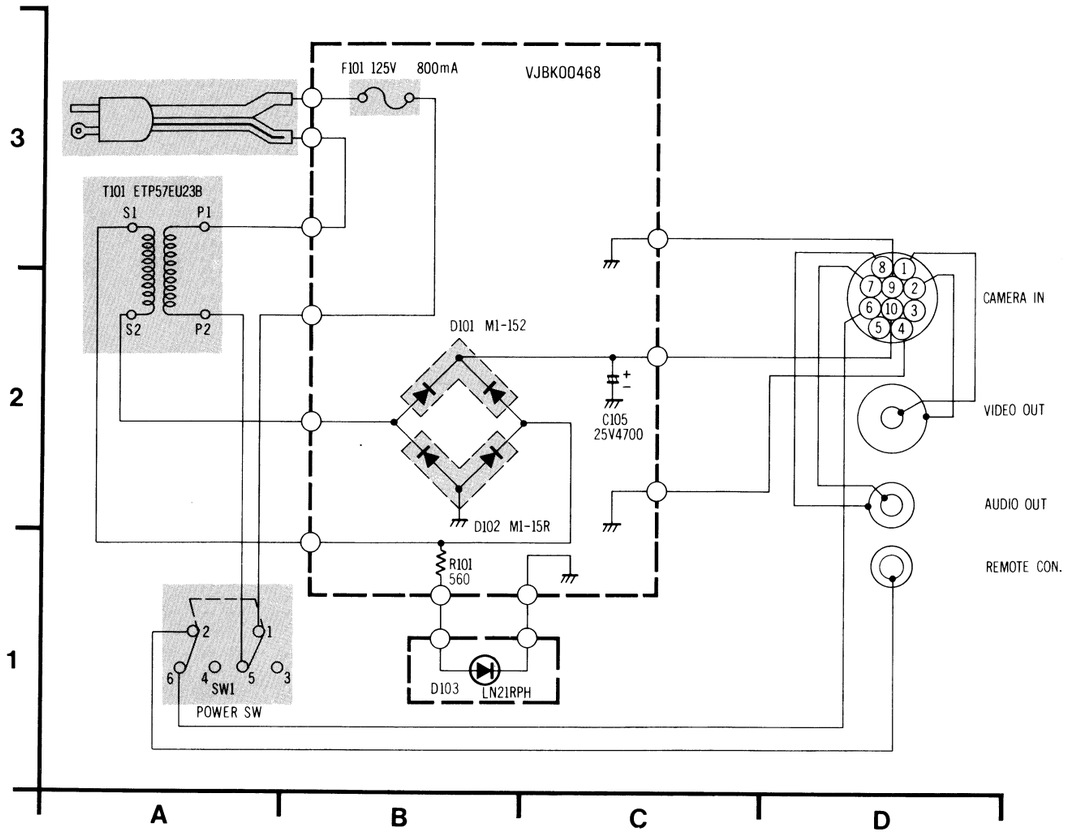


**PRODUCT SAFETY NOTE**

The shaded area on this schematic diagram incorporates special features important for protection from X-Radiation, fire and electrical shock hazards when servicing it is essential that only manufacturer's specified parts be used for the critical components in the shaded areas of the schematic.

## POWER SUPPLY CIRCUIT BOARD (VEPK00468)

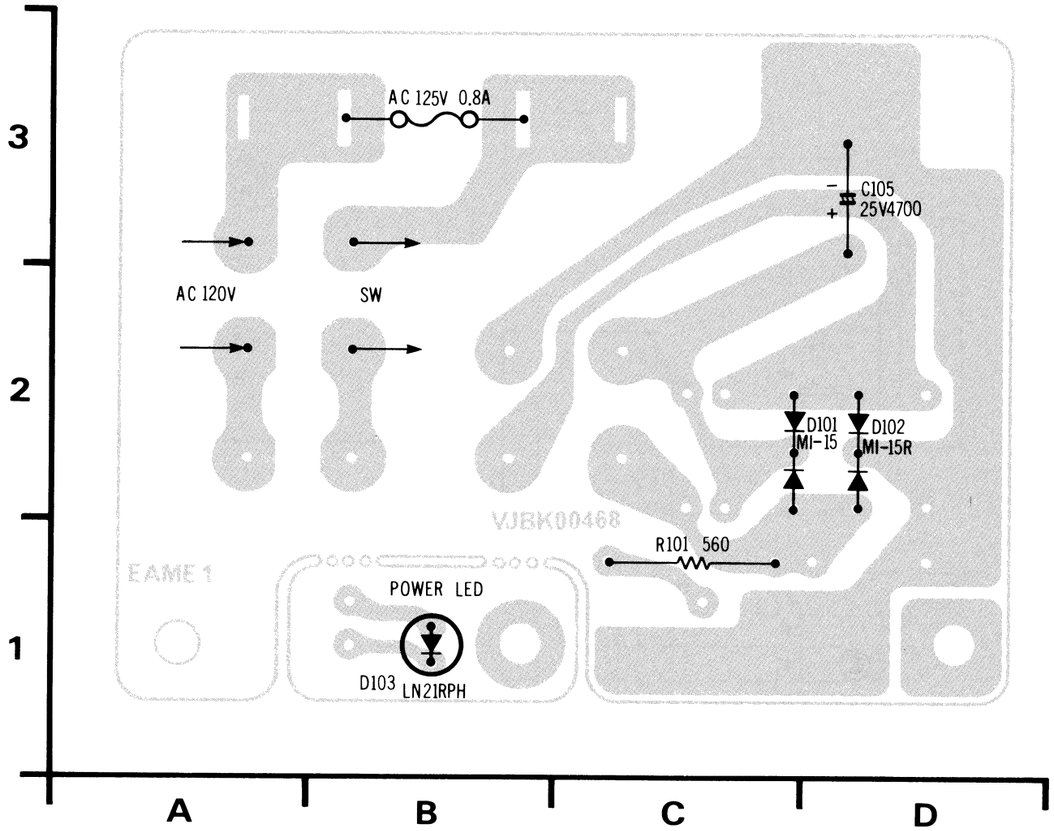

# CIRCUIT BOARD LAYOUT

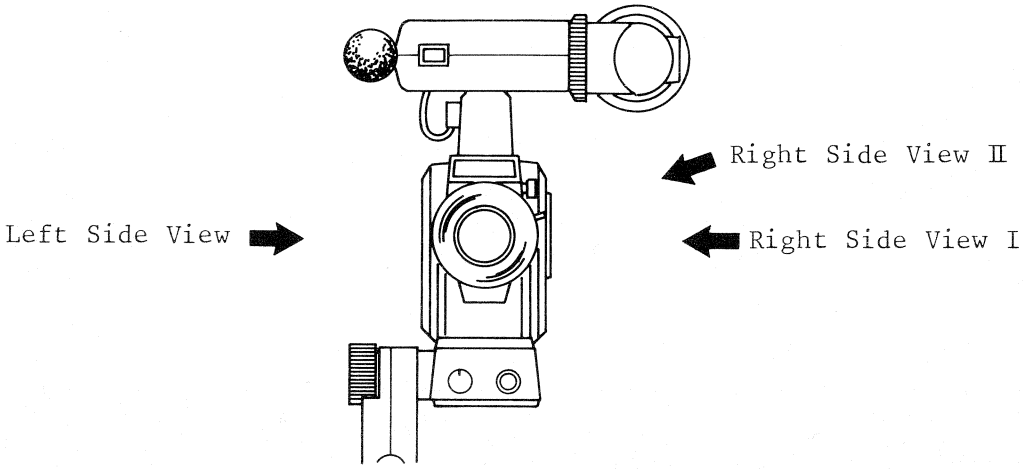


Left Side View

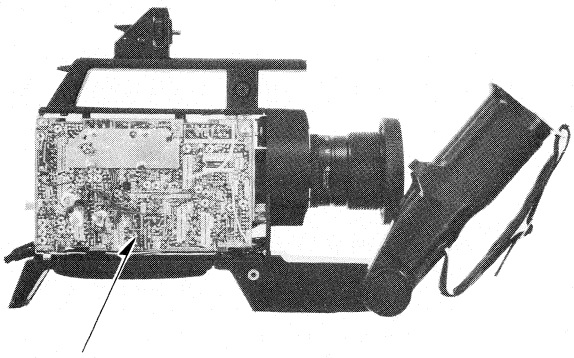


Right Side View I

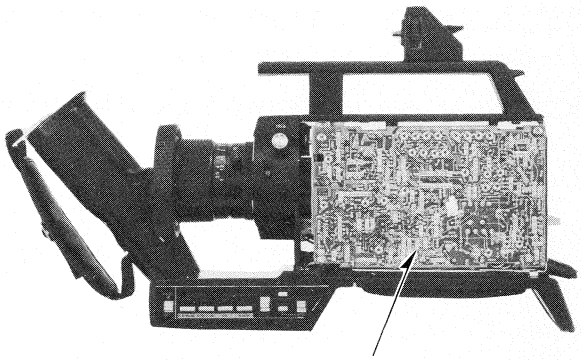


Right Side View II

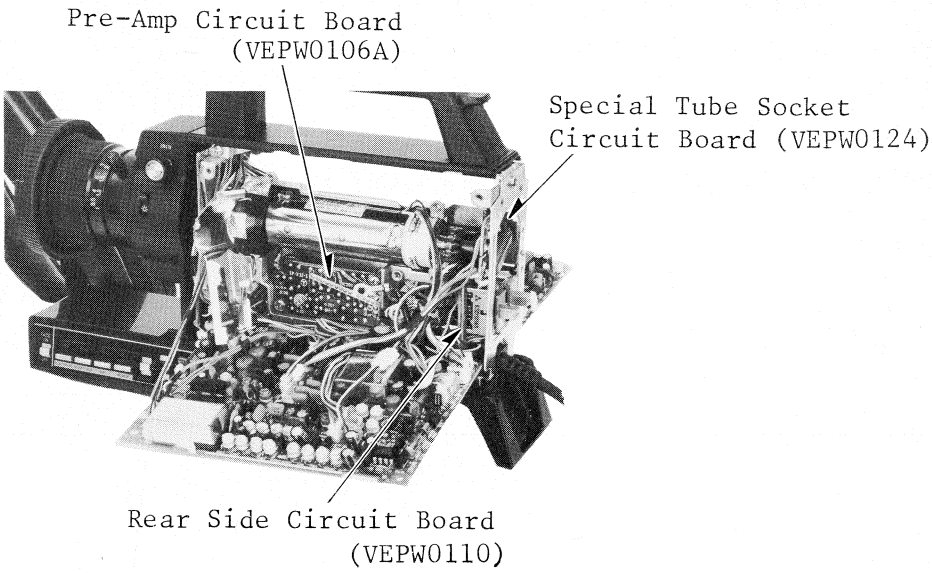

# CAMERA UNIT INTERCONNECTION SCHEMATIC DIAGRAM

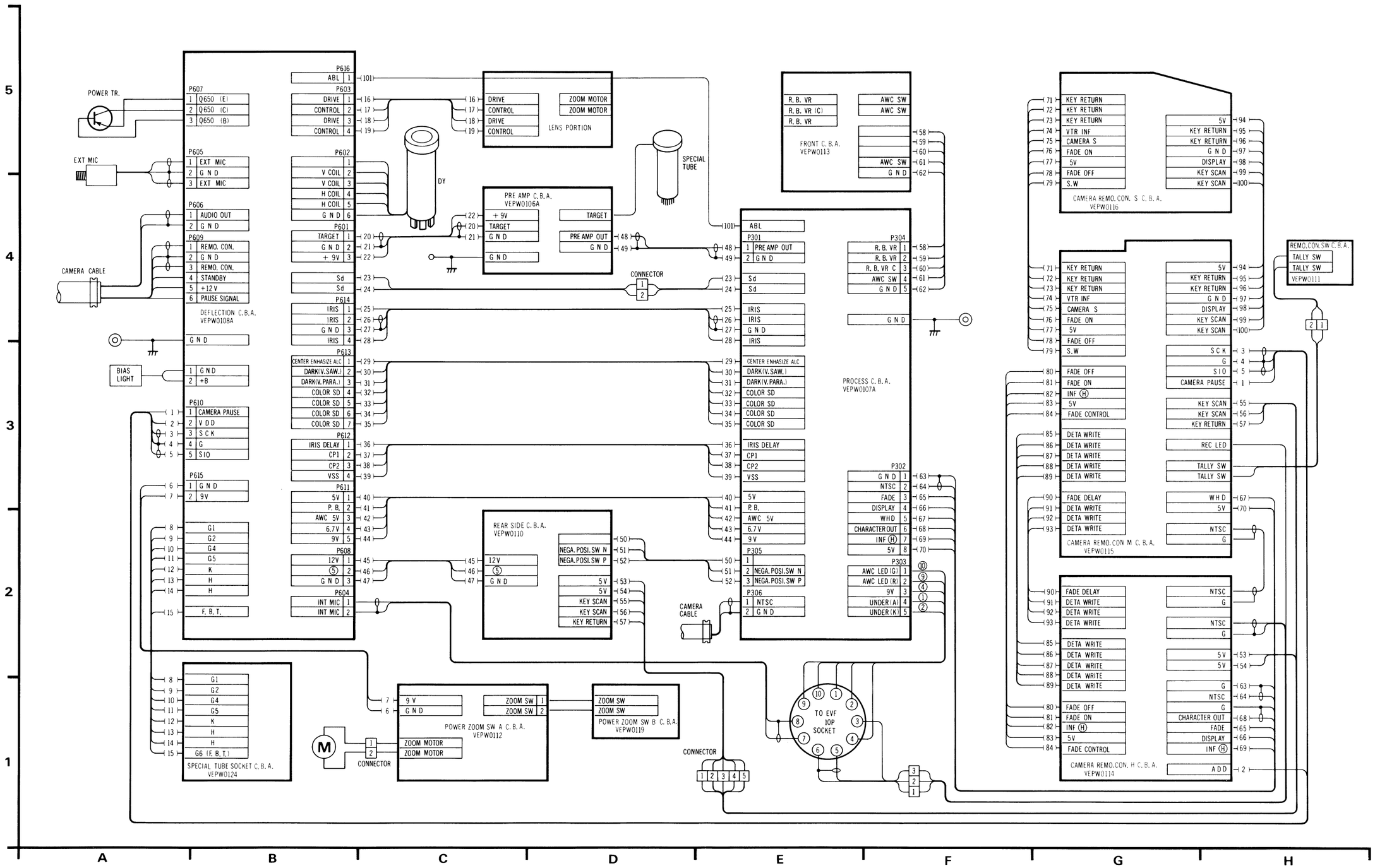

ORDER NO. VRD-8202-048

# Service Manual

Color Video Camera

# PK-802

**Vol. 5**

***Exploded Views***
***Replacement***
***Parts List***

## SPECIFICATIONS:

| | |
|---|---|
| Power Source: | DC 12 V ± 10%<br>AC 120 V ± 10%, 60 Hz ± 0.5%<br>(with Power Supply Unit) |
| **Power Consumption:**<br>**(with E.V.F)** | DC 5.8 W at 12 V DC (Battery)<br>DC 1.2 W at standby |
| **Special Tube System:** | 2/3″ frequency separation single tube system (built-in stripe filter) |
| Single Carrier Frequency: | 4.3 MHz |
| Focus System: | Electro-static type |
| Lens Mounting: | Built-in zoom lens (not "C" mount) |
| Lens: | 6 : 1 zoom lens with auto/manual iris control.<br>Auto zoom lens and macro construction<br>F: 1.4, f: 12 mm—72 mm<br>d: 1.0 m to infinity |
| Lens Diameter: | 49 mm |
| Light Sensitivity: | Minimum light intensity on optical image: 40 Lux (F: 1.4)<br>Optimum light intensity on optical image: 900 Lux |
| Video Output Level: | 1.0 Vp-p, 75Ω (M type coaxial connector)<br>(Standard NTSC signal) |
| Sync. System: | Internal Sync: RS-170 |
| Signal to Noise Ratio: | More than 45 dB |
| Horizontal Resolution: | More than 270 lines |
| Color Temperature Control: | 2 step switch (indoor/outdoor) & auto adjust |
| Microphone: | Condenser Microphone |
| Audio Output Level: | −20 dB, Hi-impedance |
| Audio Output Impedance: | High impedance (1 KΩ) |
| External Microphone Input Impedance: | 600Ω unbalanced |
| Electronic Viewfinder: | Monochrome 1 inch CRT |
| Operating Temperature: | 5°C to 35°C |
| Operating Humidity: | 10% to 75% |
| Operating Position: | Normal position only |
| Weight: | **Camera Head with E.V.F.**<br>5.1 lbs (with lens, 7 ft. cable & shoulder pad/handle grip)<br>AC adaptor (option)<br>2.4 lbs |
| Dimensions: | Camera Head with E.V.F.<br>8.3″(W) × 8.7″(H) × 11.2″(D)<br>208 mm(W) × 218 mm(H) × 282 mm(D)<br>AC adaptor (option)<br>3″(W) × 3″(H) × 6″(D)<br>80 mm(W) × 75 mm(H) × 149 mm(D) |

Weight and dimensions shown are approximate.
Specifications are subject to change without notice.

**Panasonic**


Panasonic Company
Division of Matsushita Electric
Corporation of America
One Panasonic Way, Secaucus,
New Jersey 07094

Panasonic Hawaii Inc.
91-238 Kauhi St. Ewa Beach
P.O. Box 774
Honolulu, Hawaii 96808-0774

Panasonic Canada
Division of Matsushita Electric
of Canada Limited
5770 Ambler Drive, Mississauga,
Ontario, L4W 2T3

Panasonic Sales Company,
Division of Matsushita Electric
of Puerto Rico, Inc.
Ave, 65 De Infanteria, KM 9.7
Victoria Industrial Park
Carolina, Puerto Rico 00630

# CONTENTS

EXPLODED VIEWS (Camera Head)

1. Camera Unit Section ..... 5-1
2. Camera Unit Casing Parts Section ..... 5-2
3. Remote Control Shoulder Unit Section ..... 5-3
4. Electronic Viewfinder Section ..... 5-4
5. Packing Parts Section ..... 5-5

MECHANICAL REPLACEMENT PARTS LIST (CAMERA UNIT) ..... 5-6

ELECTRICAL REPLACEMENT PARTS LIST (CAMERA UNIT) .... 5-7 ∿ 5-16

EXPLODED VIEWS (Power Supply Unit/Optional Accessory)

1. Power Supply Unit Section ..... 5-17
2. Packing Parts Section ..... 5-18

MECHANICAL REPLACEMENT PARTS LIST (POWER SUPPLY UNIT) ... 5-18

ELECTRICAL REPLACEMENT PARTS LIST (POWER SUPPLY UNIT) ... 5-18

# EXPLODED VIEW ❶ *Camera Unit Section*

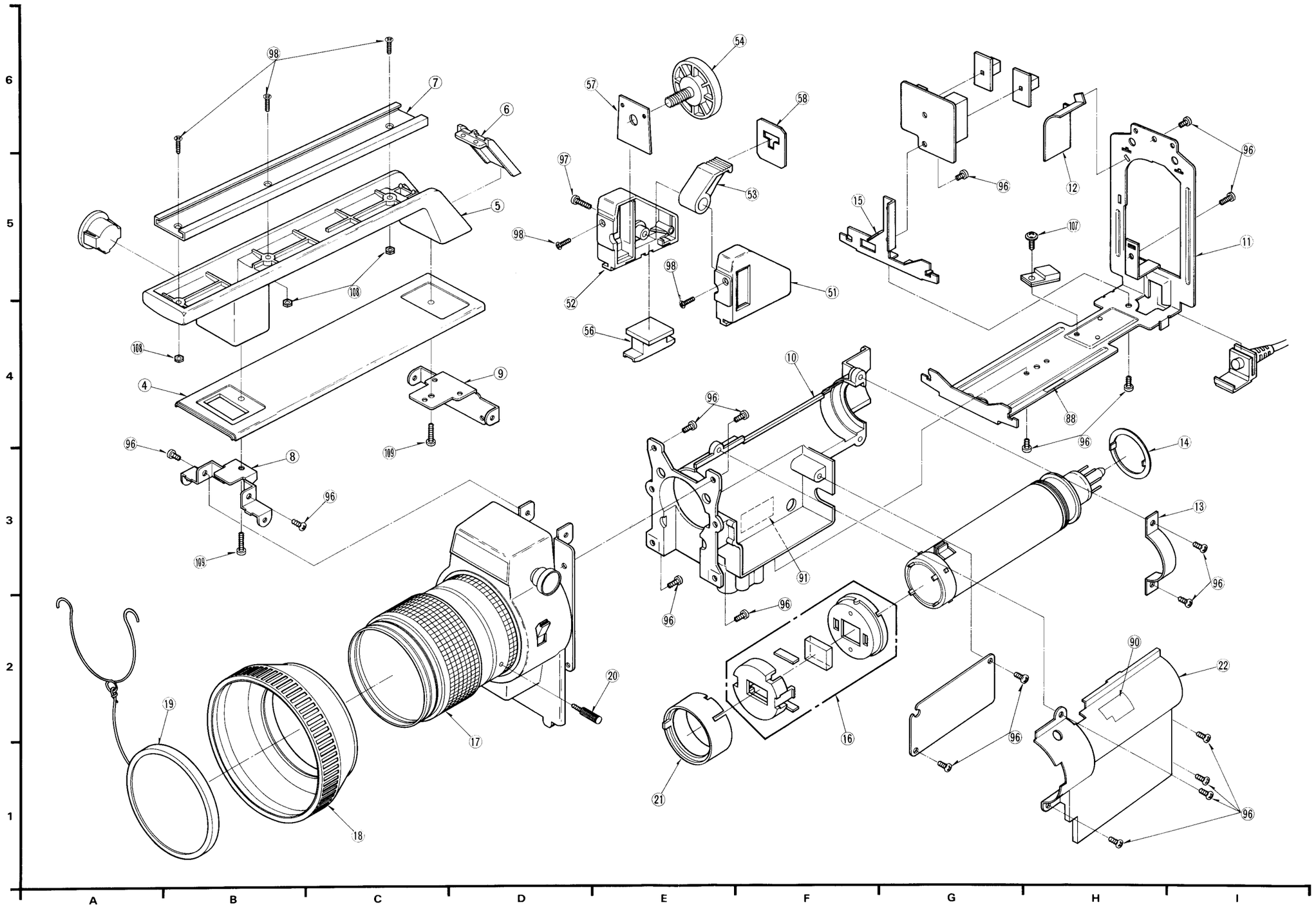

## ❷ Camera Unit Casing Parts Section

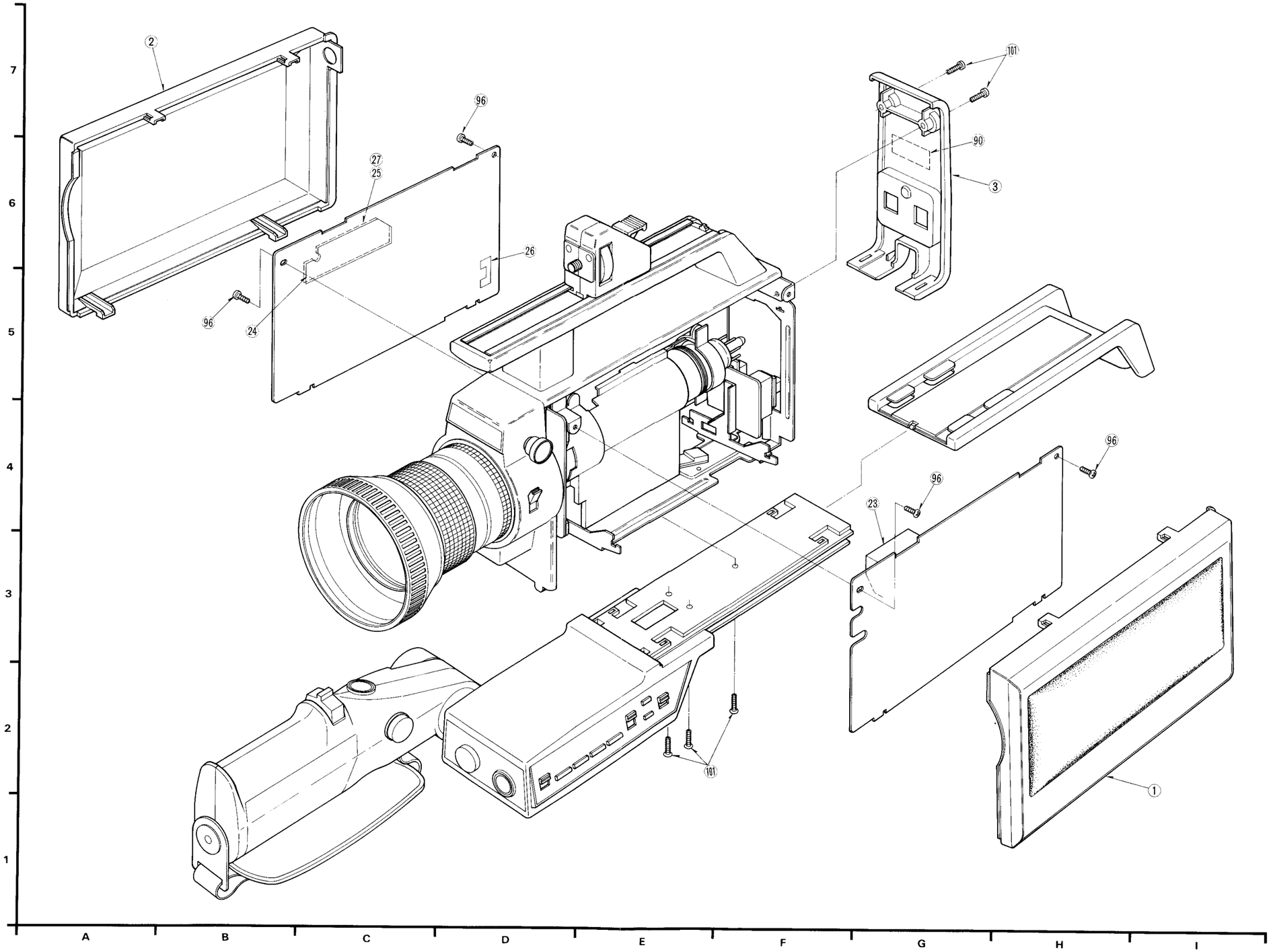

## ❸ *Remote Control Shoulder Unit Section*

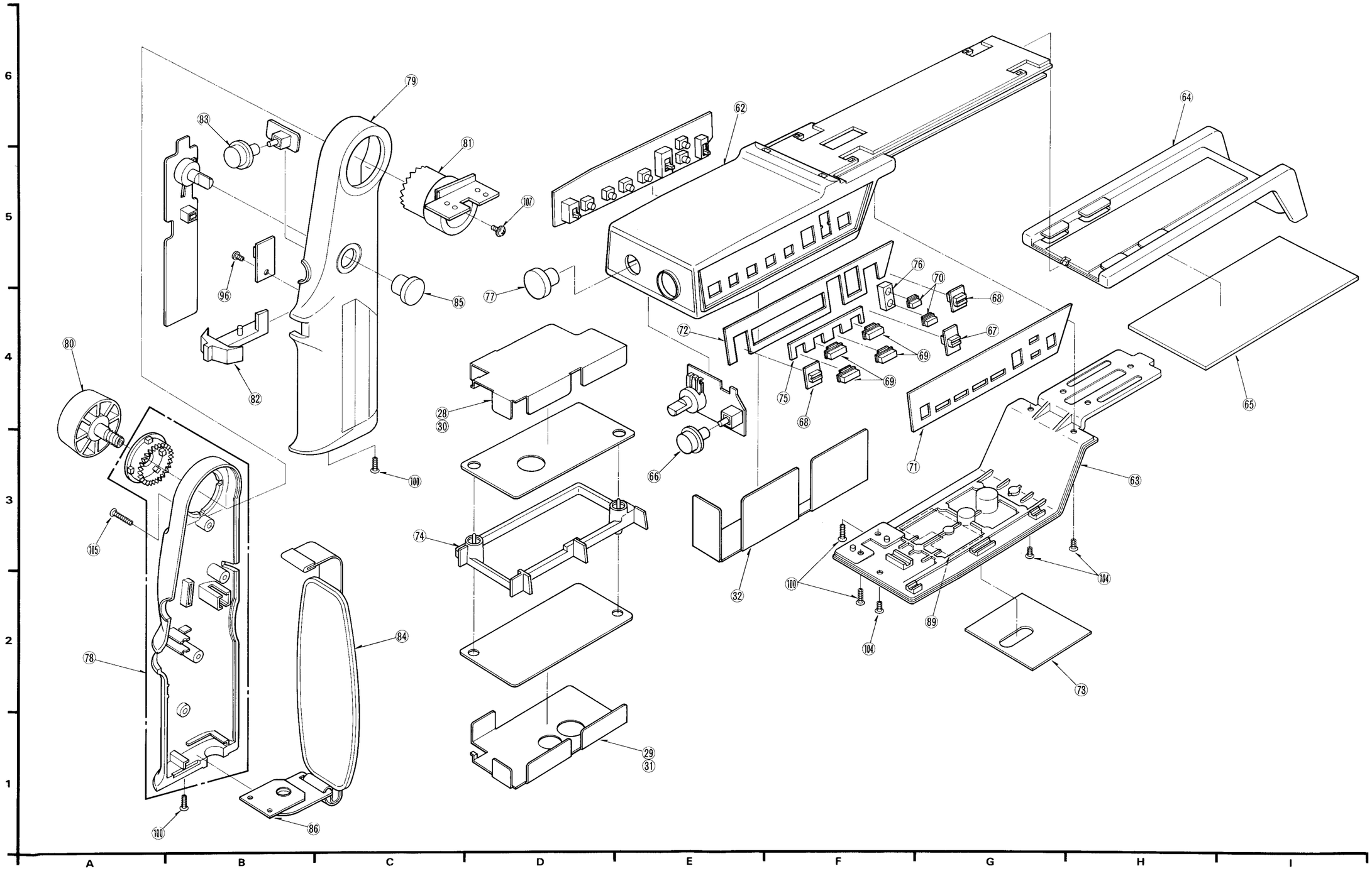

## ❹ *Electronic Viewfinder Section*

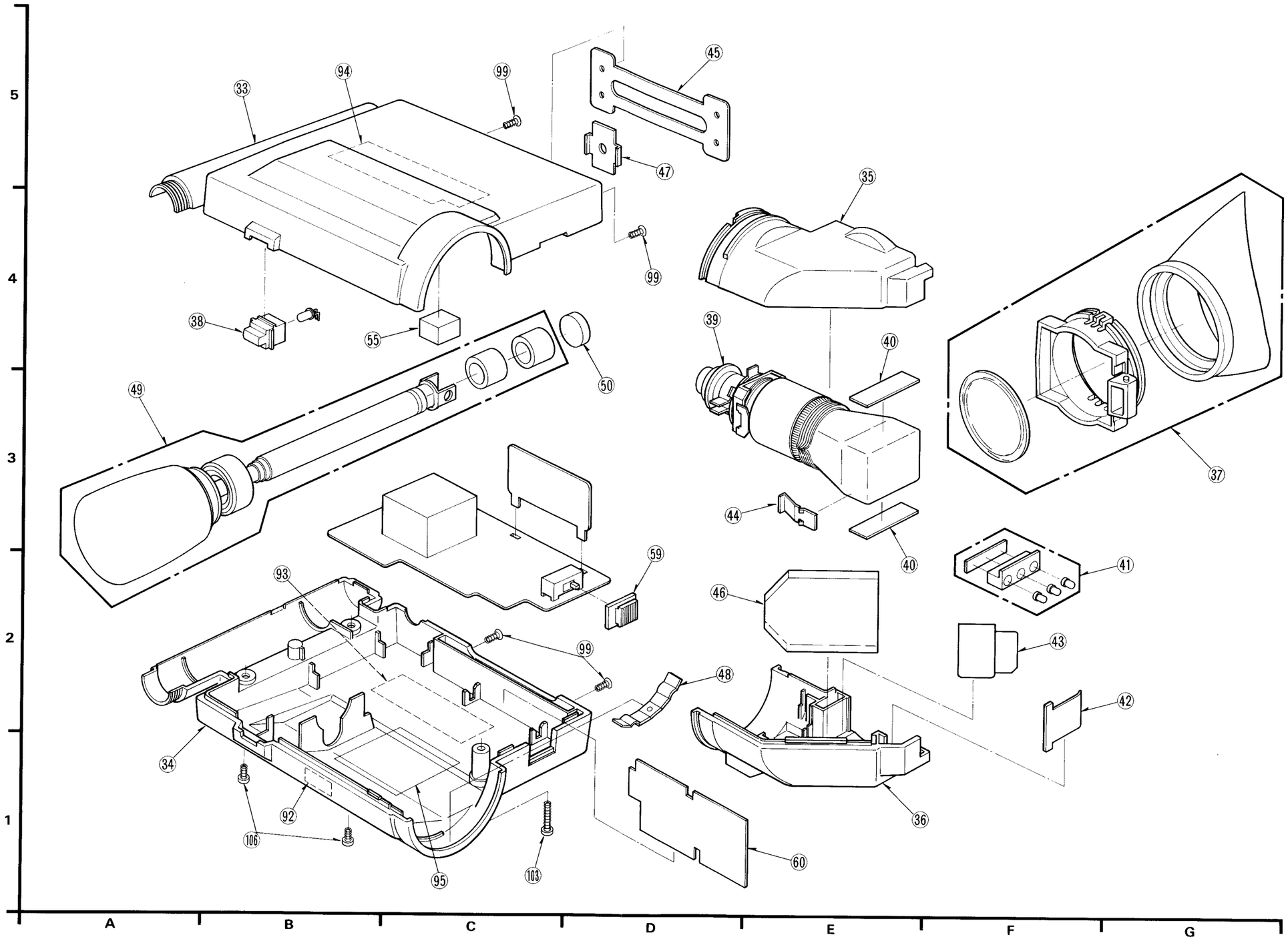

# ❺ *Packing Parts Section*

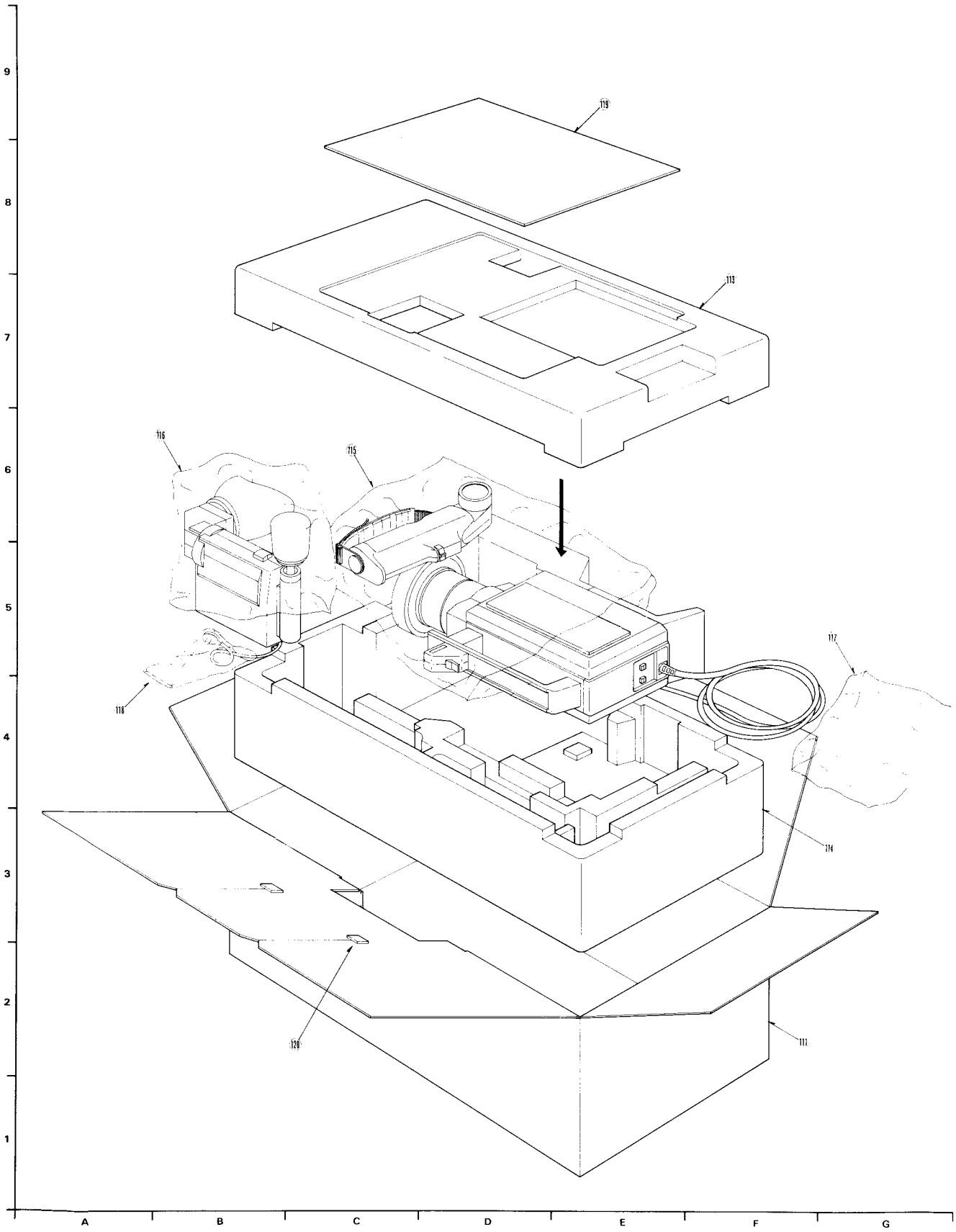

# Mechanical Replacement Parts List

Note: * Be sure to make your orders of replacement parts according to this list.
○ . . . . Available replacement part
X . . . . Not available as replacement
□ . . . . Only available on special order

| Item No. | Drawing No. | Description | Pcs/ Set | Availa-bility | Part No. | Remark |
|---|---|---|---|---|---|---|
| | | C S U | | | | |
| 1 | | RIGHT SIDE COVER ASS'Y | 1 | o | VYKW0220 | |
| 2 | | LEFT SIDE COVER ASS'Y | 1 | o | VYKW0221 | |
| 3 | | BACK COVER ASS'Y | 1 | o | VYKW0222 | |
| 4 | | TOP COVER | 1 | o | VKGW0235 | |
| 5 | | HANDLE | 1 | o | VKHW0035 | |
| 6 | | HANDLE COVER | 1 | o | VKHW0036 | |
| 7 | | ACCESSORIES SHOE | 1 | o | VGQW0016 | |
| 8 | | HANDLE ANGLE (FRONT) | 1 | o | VMAW0091 | |
| 9 | | HANDEL ANGEL (REAR) | 1 | o | VMAW0092 | |
| 10 | | MAIN CHASSIS | 1 | o | VMKW0025 | |
| 11 | | SUB CHASSIS | 1 | o | VMAW0090 | |
| 12 | | SUB CHASSIS ANGLE | 1 | o | VMAW0101 | |
| 13 | | DY BAND | 1 | o | VMAW0098 | |
| 14 | | DY SPRING | 1 | o | VMBW0023 | |
| 15 | | PRINT ANGLE | 1 | o | VMAW0093 | |
| 16 | | FILTER FIXTURE ASS'Y | 1 | o | VXEW0007 | |
| 17 | | 6-MULTIPLE POWER ZOOM LENS | 1 | o | VFLW0040 | |
| 18 | | LENS HOOD | 1 | o | VKUW0045 | |
| 19 | | HOOD CAP ASS'Y | 1 | o | VXJW0002 | |
| 20 | | LENS LEVER | 1 | o | VMLW0013 | |
| 21 | | FILTER RING | 1 | o | VMDW0028 | |
| | | | | | | |
| | | CASE | | | | |
| 22 | | PRE-AMP SHIELD COVER | 1 | o | VSCW0048 | |
| 23 | | AVR SHIELD CASE | 1 | o | VSCW0049 | |
| 24 | | 14MHz CCD SHIELD CASE ASS'Y | 1 | o | VXAW0013 | |
| 25 | | 14MHz CCD SHIELD CASE (B) | 1 | o | VSCW0051 | |
| 26 | | DL SHIELD PLATE | 1 | o | VSCW0052 | |
| 27 | | 14MHz CCD FIBER SHEET | 1 | o | VMZW0057 | |
| 28 | | REMO. CON. SHIELD CASE (A) | 1 | o | VSCW0054 | |
| 29 | | REMO. CON. SHIELD CASE (B) | 1 | o | VSCW0055 | |
| 30 | | REMO. CON. FIBER SHEET (A) | 1 | o | VMZW0061 | |
| 31 | | REMO. CON. FIBER SHEET (B) | 1 | o | VMZW0062 | |
| 32 | | REMO. CON. FIBER SHEET (C) | 1 | o | VMZW0063 | |
| | | SIDE EVF (II) | | | | |
| 33 | | EVF TOP COVER | 1 | o | VKGW0226 | |
| 34 | | EVF BOTTOM COVER | 1 | o | VKGW0227 | |
| 35 | | EVF CRT COVER (A) | 1 | o | VKGW0228 | |
| 36 | | EVF CRT COVER (B) | 1 | o | VKGW0229 | |
| 37 | | EVF DOOR ASS'Y | 1 | o | VYKW0225 | |
| 38 | | TALLY DIFFUSION PIECE | 1 | o | VGQW0009 | |
| 39 | | CRT FIXING BUSH | 1 | o | VMGW0016 | |
| 40 | | EVF CRT CUSHION | 2 | o | VMGW0029 | |
| 41 | | LED SPACER ASS'Y | 1 | o | VXFW0009 | |
| 42 | | EVF SPRING | 1 | o | VMBW0028 | |
| 43 | | EVF MIRROR SPRING | 1 | o | VMBW0013 | |
| 44 | | GROUND SPRING | 1 | o | VMAW0051 | |
| 45 | | EVF CASE FIXING ANGLE (A) | 1 | o | VMAW0103 | |
| 46 | | EVF MIRROR | 1 | o | VMRW0002 | |
| 47 | | EVF MOVEABLE ANGLE | 1 | o | VMAW0094 | |
| 48 | | EVF ROTATION SPRING | 1 | o | VMBW0027 | |
| 49 | | MIC KIT | 1 | o | VXMW0023 | |
| 50 | | MIC SPONGE (B) | 1 | o | VMFW0012 | |
| 51 | | EVF HOLDING CASE (R) | 1 | o | VKGW0224 | |
| 52 | | EVF HOLDING CASE (L) | 1 | o | VKGW0225 | |
| 53 | | EVF FIXING LEVER | 1 | o | VMLW0012 | |
| 54 | | EVF KNOB | 1 | o | VGTW0033 | |
| 55 | | EVF CUSHION | 1 | o | VMGW0030 | |
| 56 | | EVF FIXING PIECE | 1 | o | VMXW0048 | |
| 57 | | EVF CASE FIXING ANGLE (B) | 1 | o | VMAW0096 | |
| 58 | | EVF HOLDING CASE SPACER | 1 | o | VMXW0049 | |
| 59 | | R/L CHANGE KNOB | 1 | o | VGTW0044 | |
| 60 | | EVF BARRIER | 1 | o | | |
| | | | | | | |
| | | | | | | |

| Item No. | Drawing No. | Description | Pcs/ Set | Availa-bility | Part No. | Remark |
|---|---|---|---|---|---|---|
| | | REMO. CON. SHOULDER | | | | |
| 62 | | REMO. CON. CASE ASS'Y | 1 | o | VYKW0235 | |
| 63 | | REMO. CON. CHASSIS | 1 | o | VMKW0026 | |
| 64 | | SHOULDER SLIDE | 1 | o | VKGW0221 | |
| 65 | | SHOULDER PAD | 1 | o | VMFW0018 | |
| 66 | | PUSH BUTTON | 1 | o | VGTW0041 | |
| 67 | | SLIDE SW KNOB (A) | 1 | o | VGTW0034 | |
| 68 | | SLIDE SW KNOB (B) | 2 | o | VGTW0035 | |
| 69 | | PUSH BUTTON (A) | 4 | o | VGTW0036 | |
| 70 | | PUSH BUTTON (B) | 2 | o | VGTW0037 | |
| 71 | | REMO. CON. PANEL | 1 | o | VGPW0144 | |
| 72 | | REMO. CON. PLATE | 1 | o | VMAW0097 | |
| 73 | | REMO. CON. BOTTOM SHEET | 1 | o | VKNW0017 | |
| 74 | | P.C.B. FIXING PIECE | 1 | o | VKGW0223 | |
| 75 | | REMO. CON. CUSHION (A) | 1 | o | VMFW0019 | |
| 76 | | REMO. CON. CUSHION (B) | 1 | o | VMFW0020 | |
| 77 | | VOLUME KNOB | 1 | o | VGTW0040 | |
| | | | | | | |
| | | GRIP | | | | |
| 78 | | LEFT SHOULDER GRIP ASS'Y | 1 | o | VYHW0043 | |
| 79 | | RIGHT SHOULDER GRIP | 1 | o | VKHW0033 | |
| 80 | | LOCK KNOB | 1 | o | VGTW0039 | |
| 81 | | CRUTCH (A) | 1 | o | VMVW0005 | |
| 82 | | POWER ZOOM BUTTON | 1 | o | VGTW0038 | |
| 83 | | PUSH BUTTON | 1 | o | VGTW0041 | |
| 84 | | HAND STRAP | 1 | o | VFBW0007 | |
| 85 | | VOLUME KNOB | 1 | o | VGTW0040 | |
| 86 | | HAND STRAP SCREW ASS'Y | 1 | o | VXAW0012 | |
| | | | | | | |
| | | LABEL | | | | |
| 87 | | CAUTION LEBEL (D) | 1 | o | VQLW0325 | |
| 88 | | CSU CHASSIS LABEL | 1 | o | VQLW0074 | |
| 89 | | CSU CAUTION LABEL | 1 | o | VQLW0322 | |
| 90 | | CAUTION LABEL | 1 | o | VQLW0256 | |
| 91 | | ATTENTION LABEL | 1 | o | VQLW0326 | |
| 92 | | EVF CHASSIS LABEL | 1 | o | VQLW0074 | |
| 93 | | EVF CAUTION LABEL | 1 | o | VQLW0320 | |
| 94 | | WARNING LABEL | 1 | o | VQLW0324 | |
| 95 | | HIGH VOLTAGE CAUTION LABEL | 1 | o | VQLW0323 | |
| | | | | | | |
| | | SCREW | | | | |
| 96 | | BIND SCREW, 3ϕx6mm | 24 | o | XSB3+6FU | |
| 97 | | BIND SCREW, 3ϕx10mm | 2 | o | XSB3+10FXK | |
| 98 | | FLUSH HEAD MACHINE SCREW, | 5 | o | XSS2+5FXK | |
| | | 2ϕx5mm | | | | |
| 99 | | FLUCH HEAD MACHINE SCREW, | 4 | o | XSS26+5FXK | |
| | | 2.6ϕx5mm | | | | |
| 100 | | FLUCH HEAD MACHINE SCREW, | 4 | o | XSS3+6FXK | |
| | | 3ϕx6mm | | | | |
| 101 | | FLUCH HEAD MACHINE SCREW, | 3 | o | XSS3+10FXK | |
| | | 3ϕx10mm | | | | |
| 102 | | BIND TAPPING SCREW, 3ϕx16mm | 1 | o | XTB3+16GFXK | |
| 103 | | BIND TAPPING SCREW, 3ϕx25mm | 1 | o | XTB3+25GFXK | |
| 104 | | FLUSH HEAD TAPPING SCREW, | 3 | o | XTS3+8GFXK | |
| | | 3ϕx8mm | | | | |
| 105 | | FLUSH HEAD TAPPING SCREW, | 1 | o | XTS3+20GFXK | |
| | | 3ϕx20mm | | | | |
| 106 | | PAN HEAD TAPPING SCREW, | 2 | o | XTN26+6GFXK | |
| | | 2.6ϕx6mm | | | | |
| 107 | | PAN HEAD WITH WASHER ASS'Y, | 2 | o | XYN3+F6FU | |
| | | 3ϕx6mm | | | | |
| 108 | | HEX. HEADS NUTS, 2ϕ | 3 | o | XNF2JFXK | |
| 109 | | BIND TAPPING SCREW, 3ϕx12mm | 2 | o | XTB3+12GFU | |
| | | | | | | |
| | | | | | | |
| | | | | | | |
| | | | | | | |
| | | | | | | |
| | | | | | | |
| | | | | | | |

| Item No. | Drawing No. | Description | Pcs/ Set | Availa-bility | Part No. | Remark |
|---|---|---|---|---|---|---|
| | | PACKING CASE | | | | |
| 112 | | PACKING CASE | 1 | o | VPKW0202 | |
| 113 | | CUSHION TOP | 1 | o | VPGW0062 | |
| 114 | | CUSHION BOTTOM | 1 | o | VPGW0063 | |
| 115 | | POLY BAG FOR CAMERA HEAD | 1 | o | XZB29X55A02 | |
| 116 | | POLY BAG FOR EVF | 1 | o | XZB22X42A02 | |
| 117 | | POLY BAG FOR CAMERA CABLE | 1 | o | XZB15X28A02 | |
| 118 | | POLY BAG FOR EVF CABLE | 1 | o | XZB10X15A02 | |
| 119 | | FAN BAG KIT | 1 | o | VQFW0094 | |
| 120 | | HANDLE | 1 | o | VPQW0004 | |

# Electrical Replacement Parts List

Note:
1. Be sure to make your orders of replacement parts according to this list.
2. IMPORTANT SAFETY NOTICE
   Components identified by shade have special characteristics important for safety. When replacing any of these components, use only the original ones.
3. Unless otherwise specified;
   All resistors are in OHMS (Ω), 1/8w, ±5% carbon, K=1,000Ω, M=1,000KΩ.
   All capacitors are in MICROFARADS (μF), ±10% P=μμF.
   All coils are in MICROHENRIES (μH), m=10μ.
4. C.B.A: Circuit Board Assembly.
5. C.B: Circuit Board.

| Ref. No. | | Part No. | Part Name & Description | Pcs / Set | Remarks |
|---|---|---|---|---|---|
| | | VEPW0106A | PRE AMP C.B.A. | 1 | |
| | | VEPW0107A | PROCESS C.B.A. | 1 | |
| | | VEPW0108A | DEFLECTION C.B.A. | 1 | |
| | | VEPW0110 | REAR SIDE C.B.A. | 1 | |
| | | VEPW0111 | REMO. CON. SW C.B.A. | 1 | |
| | | VEPW0112 | POWER ZOOM SW A C.B.A. | 1 | |
| | | VEPW0119 | POWER ZOOM SW B C.B.A. | 1 | |
| | | VEPW0113 | FRONT C.B.A. | 1 | |
| | | VEPW0124 | SPECIAL TUBE SOCKET C.B.A. | 1 | |
| | | VEPW0114 | CAMERA REMO. CON. H C.B.A. | 1 | |
| | | VEPW0115 | CAMERA REMO. CON. M C.B.A. | 1 | |
| | | VEPW0116 | CAMERA REMO. CON. S C.B.A. | 1 | |
| | | VEPW0122 | EVF A C.B.A. | 1 | |
| | | VEPW0135 | EVF B C.B.A. | 1 | |
| | | VEPW0123 | EVF LED C.B.A. | 1 | |
| | | VEPW0089A | BIAS LIGHT | 1 | |
| | | VEPW0089B | BIAS LIGHT | 1 | |
| | | | PRE-AMP C.B.A. | | |
| | | | Integrated Circuit | | |
| IC201 | | EHMK720A72FB | | 1 | |
| | | | Transistor | | |
| Q201 | | 2SK218 | | 1 | |
| | | | Diode | | |
| D201 | | MA26 | | 1 | |
| | | | Resistors | | |
| R201 | | ERD25TJ565 | 1/4W 5.6M | 1 | |
| R202 | | ERO50CKF2704 | 1/2W 2.7M | 1 | |
| R203 | | ERD10TJ181 | 180 | 1 | |
| R204 | | ERD10TJ561 | 560 | 1 | |
| R205 | | ERD10TJ124 | 120K | 1 | |
| R206 | | ERD10TJ104 | 100K | 1 | |

| Ref. No. | | Part No. | Part Name & Description | | | Pcs / Set | Remarks |
|---|---|---|---|---|---|---|---|
| | | | Capacitors | | | | |
| C201 | | VCAMX100V223K | Mylar | 100V | 0.022 | 1 | |
| C202 | | ECSF10E47 | Tantalum | 10V | 47 | 1 | |
| C203 | | VCAMX50V102K | Mylar | 50V | 0.001 | 1 | |
| C204 | | ECCW1H010CC5 | Ceramic | 50V | 1P | 1 | |
| C205 | | ECSF10E10 | Tantalum | 10V | 10 | 1 | |
| C206 | | ECSF10E47 | Tantalum | 10V | 47 | 1 | |
| C207 | | ECSF10E10 | Tantalum | 10V | 10 | 1 | |
| C208 | | ECSF35ER47 | Tantalum | 35V | 0.47 | 1 | |
| C209 | | ECCW1H080CC5 | Ceramic | 50V | 8P | 1 | |
| C210 | | ECV1ZW40X53N | Trimmer | 1W | 40P | 1 | |
| C211 | | ECCW1H220JC5 | Ceramic | 50V | 22P | 1 | |
| C212 | | ECSF6E47 | Tantalum | 6.3V | 47 | 1 | |
| C213 | | ECQE1104KN | Mylar | 100V | 0.1 | 1 | |
| | | | Coils | | | | |
| L201 | | ELT12R010 | | | 220μH | 1 | |
| L202 | | ELO606SK101K | | | 100μH | 1 | |
| | | | Miscellaneous | | | | |
| | | VEKW0095 | Lug Terminal Ass'y | | | 1 | |
| | | VEKW0340 | Connector Ass'y 3P | | | 1 | |
| | | VEKW0331 | Connector Ass'y 2P | | | 1 | |
| | | | PROCESS C.B.A. | | | | |
| | | | Integrated Circuits | | | | |
| IC301 | | AN2131 | | | | 1 | |
| IC302 | | AN2140 | | | | 1 | |
| IC303 | | AN2240 | | | | 1 | |
| IC304 | | AN2330 | | | | 1 | |
| IC305 | | MN6064 | | | | 1 | |
| IC306 | | EHM-723F13S | Hi-Mic | | | 1 | |
| IC307 | | AN2430 | | | | 1 | |
| IC308 | | MN8036 | | | | 1 | |
| IC309 | | EHM-K835W65S | Hi-Mic | | | 1 | |
| IC310 | | AN6914 | | | | 1 | |
| IC311 | | MN6069 | | | | 1 | |
| IC312 | | AN2340 | | | | 1 | |
| IC313 | | AN2341 | | | | 1 | |
| | | | Transistors | | | | |
| Q301 | | 2SB641(Q,R) | | | | 1 | |
| Q302-306 | | 2SD636(Q,R) | | | | 5 | |
| Q307 | | 2SB641(Q,R) | | | | 1 | |
| Q308 | | 2SD636(Q,R) | | | | 1 | |
| Q309 | | 2SC2377 | | | | 1 | |
| Q310,311 | | 2SD636(Q,R) | | | | 2 | |
| Q312 | | 2SC2206 | | | | 1 | |
| Q313 | | 2SB641(Q,R) | | | | 1 | |
| Q314-317 | | 2SD636(Q,R) | | | | 4 | |
| Q318,319 | | 2SB641(Q,R) | | | | 2 | |
| Q320 | | 2SA838(B,C) | | | | 1 | |

| Ref. No. | | Part No. | Part Name & Description | Pcs / Set | Remarks |
|---|---|---|---|---|---|
| | | | Diodes | | |
| D301-304 | | MA165 | | 4 | |
| D305 | | MA26 | | 1 | |
| D306,307 | | MA165 | | 2 | |
| D308 | | MZ303A | | 1 | |
| D309,310 | | MA165 | | 2 | |
| | | | Resistors | | |
| R301 | | ERD10TJ102 | 1K | 1 | |
| R302 | | ERD10TJ152 | 1.5K | 1 | |
| R303 | | ERD10TJ332 | 3.3K | 1 | |
| R304 | | ER010CKF1802 | 18K | 1 | |
| R305-307 | | ERD10TJ224 | 220K | 3 | |
| R308 | | ERD10TJ563 | 56K | 1 | |
| R309 | | ERD10TJ122 | 1.2K | 1 | |
| R310,311 | | ERD10TJ472 | 4.7K | 2 | |
| R312 | | ERD10TJ105 | 1M | 1 | |
| R313 | | ERD10TJ392 | 3.9K | 1 | |
| R314-316 | | ERD10TJ102 | 1K | 3 | |
| R317 | | ERD10TJ222 | 2.2K | 1 | |
| R318 | | ERD10TJ102 | 1K | 1 | |
| R319 | | ERD10TJ104 | 100K | 1 | |
| R320 | | ERD10TJ122 | 1.2K | 1 | |
| R321 | | ERD10TJ182 | 1.8K | 1 | |
| R322 | | ERD10TJ391 | 390 | 1 | |
| R323 | | ERD10TJ103 | 10K | 1 | |
| R324 | | ERD10TJ392 | 3.9K | 1 | |
| R325 | | ERD10TJ102 | 1K | 1 | |
| R326 | | ERD10TJ222 | 2.2K | 1 | |
| R328 | | ERD10TJ102 | 1K | 1 | |
| R329,330 | | ERD10TJ153 | 15K | 2 | |
| R331 | | ERD10TJ152 | 1.5K | 1 | |
| R334 | | ERD10TJ821 | 820 | 1 | |
| R335 | | ERD10TJ683 | 68K | 1 | |
| R336 | | ERD10TJ333 | 33K | 1 | |
| R337 | | ERD10TJ392 | 3.9K | 1 | |
| R338 | | ERD10TJ273 | 27K | 1 | |
| R339 | | ERD10TJ103 | 10K | 1 | |
| R340 | | ERD10TJ561 | 560 | 1 | |
| R341 | | ERD10TJ100 | 10 | 1 | |
| R342 | | ERD10TJ561 | 560 | 1 | |
| R343 | | ERD10TJ562 | 5.6K | 1 | |
| R344 | | ERD10TJ331 | 330 | 1 | |
| R345 | | ERD10TJ271 | 270 | 1 | |
| R346 | | ERD10TJ681 | 680 | 1 | |
| R347 | | ERD10TJ273 | 27K | 1 | |
| R348,349 | | ERD10TJ561 | 560 | 2 | |
| R350 | | ERD10TJ102 | 1K | 1 | |
| R351,352 | | ERD10TJ152 | 1.5K | 2 | |
| R353,354 | | ERD10TJ153 | 15K | 2 | |
| R355 | | ERD10TJ473 | 47K | 1 | |
| R356 | | ERD10TJ104 | 100K | 1 | |
| R357,358 | | ERD10TJ153 | 15K | 2 | |
| R359 | | ERD10TJ473 | 47K | 1 | |
| R360 | | ERD10TJ104 | 100K | 1 | |
| R361-363 | | ERD10TJ562 | 5.6K | 3 | |
| R364 | | ERD10TJ104 | 100K | 1 | |
| R365,366 | | ERD10TJ822 | 8.2K | 2 | |
| R367,368 | | ERD10TJ182 | 1.8K | 2 | |
| R369 | | ERD10TJ123 | 12K | 1 | |
| R370 | | ERD10TJ562 | 5.6K | 1 | |
| R371 | | ERD10TJ472 | 4.7K | 1 | |
| R372,373 | | ERD10TJ103 | 10K | 2 | |
| R374 | | ERD10TJ333 | 33K | 1 | |
| R375,376 | | ERD10TJ104 | 100K | 2 | |
| R377 | | ERD10TJ271 | 270 | 1 | |
| R379 | | ERD10TJ122 | 1.2K | 1 | |
| R380 | | ERD10TJ222 | 2.2K | 1 | |
| R381 | | ERD10TJ561 | 560 | 1 | |

| Ref. No. | Part No. | Part Name & Description | Pcs / Set | Remarks |
|---|---|---|---|---|
| R382 | ERD10TJ752 | 7.5K | 1 | |
| R383 | ERD10TJ163 | 16K | 1 | |
| R384 | ERD10TJ472 | 4.7K | 1 | |
| R385 | ERD10TJ561 | 560 | 1 | |
| R386,387 | ERD10TJ223 | 22K | 2 | |
| R388 | ERD10TJ152 | 1.5K | 1 | |
| R389 | ERD10TJ272 | 2.7K | 1 | |
| R390,391 | ERD10TJ102 | 1K | 2 | |
| R392 | ERD10TJ183 | 18K | 1 | |
| R393,394 | ERD10TJ333 | 33K | 2 | |
| R395 | ERD10TJ330 | 33 | 1 | |
| R396,397 | ERD10TJ681 | 680 | 2 | |
| R398 | ERD10TJ221 | 220 | 1 | |
| R399 | ERD10TJ393 | 39K | 1 | |
| R3100,3101 | ERD10TJ223 | 22K | 2 | |
| R3102 | ERD10TJ103 | 10K | 1 | |
| R3103 | ERD10TJ102 | 1K | 1 | |
| R3104 | ERD10TJ103 | 10K | 1 | |
| R3105 | ERD10TJ393 | 39K | 1 | |
| R3106,3107 | ERD10TJ223 | 22K | 2 | |
| R3108,3109 | ERD10TJ393 | 39K | 2 | |
| R3110 | ERD10TJ472 | 4.7K | 1 | |
| R3111 | ERD10TJ562 | 5.6K | 1 | |
| R3112 | ERD10TJ223 | 22K | 1 | |
| R3113 | ERD10TJ562 | 5.6K | 1 | |
| R3114 | ERD10TJ682 | 6.8K | 1 | |
| R3115 | ERD10TJ562 | 5.6K | 1 | |
| R3116 | ERD10TJ563 | 56K | 1 | |
| R3117 | ERD10TJ562 | 5.6K | 1 | |
| R3118,3119 | ERD10TJ153 | 15K | 2 | |
| R3120 | ERD10TJ473 | 47K | 1 | |
| R3121 | ERD10TJ102 | 1K | 1 | |
| R3122 | ERD10TJ222 | 2.2K | 1 | |
| R3123 | ERD10TJ332 | 3.3K | 1 | |
| R3124 | ERD10TJ101 | 100 | 1 | |
| R3125 | ERD10TJ104 | 100K | 1 | |
| R3126 | ERD10TJ472 | 4.7K | 1 | |
| R3127 | ERD10TJ104 | 100K | 1 | |
| R3128 | ERD10TJ393 | 39K | 1 | |
| R3129 | ERD10TJ473 | 47K | 1 | |
| R3130 | ERD10TJ103 | 10K | 1 | |
| R3131 | ERD10TJ472 | 4.7K | 1 | |
| R3132 | ERD10TJ222 | 2.2K | 1 | |
| R3133 | ERD10TJ473 | 47K | 1 | |
| R3134-3136 | ERD10TJ102 | 1K | 3 | |
| R3137 | ERD10TJ561 | 560 | 1 | |
| R3138 | ERD10TJ103 | 10K | 1 | |
| R3139 | ERD10TJ272 | 2.7K | 1 | |
| R3140 | ERD10TJ560 | 56 | 1 | |
| R3141 | ERD10TJ103 | 10K | 1 | |
| R3142 | ERD10TJ122 | 1.2K | 1 | |
| R3143 | ERD25TJ565 | 1/4W 5.6M | 1 | |
| R3144 | ERD10TJ222 | 2.2K | 1 | |
| R3145 | ERTD2FHJ332S | 3.3K | 1 | |
| R3146 | ERD10TJ102 | 1.2K | 1 | |
| R3147 | ERD10TJ821 | 820 | 1 | |
| R3148 | ERD10TJ124 | 10K | 1 | |
| | | | | |
| | | | | |
| | | Variable Resistors | | |
| VR301 | EVN3ACA00B13 | | 1 | |
| VR302 | EVN3ACA00B15 | | 1 | |
| VR303-305 | EVN3ACA00B14 | | 3 | |
| VR306 | EVN3ACA00B15 | | 1 | |
| VR307,308 | EVN3ACA00B14 | | 2 | |
| VR309 | EVN3ACA00B33 | | 1 | |
| VR310-317 | EVN3ACA00B14 | | 8 | |
| VR318 | EVN3ACA00B33 | | 1 | |
| VR319 | EVN3ACA00B15 | | 1 | |
| VR320-322 | EVN3ACA00B33 | | 3 | |

| Ref. No. | Part No. | Part Name & Description | Pcs / Set | Remarks |
|---|---|---|---|---|
| VR323,324 | EVN3ACA00B15 | | 2 | |
| VR325 | EVN3ACA00B14 | | 1 | |
| VR326 | EVN3ACA00B13 | | 1 | |
| VR327 | EVN3ACA00B23 | | 1 | |
| VR328,329 | EVN3ACA00B33 | | 2 | |
| VR330 | EVN3ACA00B52 | | 1 | |
| | | | | |
| | | Capacitors | | |
| C301 | ECSF6E10 | Tantalum 6.3V 10 | 1 | |
| C302 | ECQV05103JZ | Mylar 50V 0.01 | 1 | |
| C303 | ECSF6E10 | Tantalum 6.3V 10 | 1 | |
| C305 | ECEA0JK470 | Electrolytic 6.3V 47 | 1 | |
| C306 | ECCF1H390JC | Ceramic 50V 39P | 1 | |
| C307 | ECSF35ER47 | Tantalum 35V 0.47 | 1 | |
| C308 | ECEA1HK010 | Electrolytic 50V 1 | 1 | |
| C309,310 | ECEA1CK100 | Electrolytic 16V 10 | 2 | |
| C311 | ECSF16E6R8 | Tantalum 16V 6.8 | 1 | |
| C312 | ECSF35ER68 | Tantalum 35V 0.68 | 1 | |
| C313 | ECEA1CK100 | Electrolytic 16V 10 | 1 | |
| C314 | ECCR1H391J5 | Ceramic 50V 390P | 1 | |
| C316 | ECCF1H820JC5 | Ceramic 50V 82P | 1 | |
| C317 | ECCF1H221JC5 | Ceramic 50V 220P | 1 | |
| C318 | ECCF1H470JC5 | Ceramic 50V 470P | 1 | |
| C319 | ECSF35ER47 | Tantalum 35V 0.47 | 1 | |
| C320 | ECCF1H271JC5 | Ceramic 50V 270P | 1 | |
| C321 | ECSF6E10 | Tantalum 6.3V 10 | 1 | |
| C322 | ECEA0JK470 | Electrolytic 6.3V 47 | 1 | |
| C323 | ECEA1HKNR47 | Electrolytic 50V 0.47 | 1 | |
| C324 | ECSF35ER47 | Tantalum 35V 0.47 | 1 | |
| C325 | ECEA1CK100 | Electrolytic 16V 10 | 1 | |
| C326 | ECCF1H101JC5 | Ceramic 50V 100P | 1 | |
| C327 | ECEA1CK100 | Electrolytic 16V 10 | 1 | |
| C328 | ECEA0JK470 | Electrolytic 6.3V 47 | 1 | |
| C329 | ECQV05103JZ | Mylar 50V 0.01 | 1 | |
| C330 | ECEA1CK100 | Electrolytic 16V 10 | 1 | |
| C332 | ECCF1H181JC5 | Ceramic 50V 180P | 1 | |
| C333 | ECCF1H330JC5 | Ceramic 50V 33P | 1 | |
| C334 | ECEA0JK470 | Electrolytic 6.3V 47 | 1 | |
| C335 | ECCF1H181JC5 | Ceramic 50V 180P | 1 | |
| C336 | ECSF6E47 | Tantalum 6.3V 47 | 1 | |
| C337,338 | ECEA1CK100 | Electrolytic 16V 10 | 2 | |
| C339-342 | ECCF1H820J5 | Ceramic 50V 82P | 4 | |
| C343 | ECCF1H270JC5 | Ceramic 50V 27P | 1 | |
| C344 | ECV1ZW40X53N | Trimmer 1W 40P | 1 | |
| C345,346 | ECCF1H820J5 | Ceramic 50V 82P | 2 | |
| C347 | ECEA1CK100 | Electrolytic 16V 10 | 1 | |
| C348 | ECSF6E47 | Tantalum 6.3V 47 | 1 | |
| C349 | ECCF1H820J5 | Ceramic 50V 82P | 1 | |
| C350 | ECEA1CK100 | Electrolytic 16V 10 | 1 | |
| C351 | ECQV05103JZ | Mylar 50V 0.01 | 1 | |
| C352-354 | ECCR1H680J5 | Ceramic 50V 68P | 3 | |
| C355 | ECCF1H270JC5 | Ceramic 50V 27P | 1 | |
| C356 | ECQV05103JZ | Mylar 50V 0.01 | 1 | |
| C357 | ECEA1CK100 | Electrolytic 16V 10 | 1 | |
| C358-360 | ECQV05103JZ | Mylar 50V 0.01 | 3 | |
| C361 | ECV1ZW20X64 | Trimmer 1W 20P | 1 | |
| C362,363 | ECEA1HKNR47 | Electrolytic 50V 0.47 | 2 | |
| C364 | ECKF1H103ZF | Ceramic 50V 0.01 | 1 | |
| C365 | ECSF10E47 | Tantalum 10V 47 | 1 | |
| C366 | ECEA1CK100 | Electrolytic 16V 10 | 1 | |
| C368 | ECSF10E47 | Tantalum 10V 47 | 1 | |
| C369 | ECEA1HKR47 | Electrolytic 50V 0.47 | 1 | |
| C370,371 | ECEA1CK100 | Electrolytic 16V 10 | 2 | |
| C372 | ECEA0JK470 | Electrolytic 6.3V 47 | 1 | |
| C373 | ECEA1HKNR47 | Electrolytic 50V 0.47 | 1 | |
| C374,375 | ECEA0JK470 | Electrolytic 6.3V 47 | 2 | |
| C376 | ECSF10E10 | Tantalum 10V 10 | 1 | |
| C377 | ECCR1H820J5 | Ceramic 50V 82P | 1 | |
| C378,379 | ECEA1HK3R3 | Electrolytic 50V 3.3 | 2 | |
| C380,381 | ECKR1H103ZF5 | Ceramic 50V 0.01 | 2 | |

| Ref. No. | | Part No. | Part Name & Description | Pcs / Set | Remarks |
|---|---|---|---|---|---|
| C382 | | ECSF6E10 | Tantalum 6.3V 10 | 1 | |
| C383-387 | | ECEA1CK100 | Electrolytic 16V 10 | 5 | |
| C388 | | ECSF35ER47 | Tantalum 35V 0.47 | 1 | |
| C389 | | ECCF1H270JC5 | Ceramic 50V 27P | 1 | |
| C390 | | ECSF35ER47 | Tantalum 35V 0.47 | 1 | |
| C391-393 | | ECEA1CK100 | Electrolytic 16V 10 | 3 | |
| C394 | | ECSF6E10 | Tantalum 6.3V 10 | 1 | |
| C395-397 | | ECEA1CK100 | Electrolytic 16V 10 | 3 | |
| C398 | | ECCF1H270JC5 | Ceramic 50V 27P | 1 | |
| C399,3100 | | ECEA1CK100 | Electrolytic 16V 10 | 2 | |
| C3101 | | ECSF35ER47 | Tantalum 35V 0.47 | 1 | |
| C3102 | | ECEA1AN471S | Electrolytic 10V 470 | 1 | |
| C3103 | | ECCR1H331J5 | Ceramic 50V 330P | 1 | |
| C3104 | | ECEA1HK010 | Electrolytic 50V 1 | 1 | |
| C3105 | | ECSF35ER47 | Tantalum 35V 0.47 | 1 | |
| C3106 | | ECQV05103JZ | Mylar 50V 0.01 | 1 | |
| C3108 | | ECCF1H151JC5 | Ceramic 50V 150P | 1 | |
| C3110 | | ECCF1H180J | Ceramic 50V 18P | 1 | |
| C3137 | | ECSF6E10 | Tantalum 6.3V 10 | 1 | |
| | | | | | |
| | | | | | |
| | | | Coils | | |
| L301 | | EL0606SK220K | 22μH | 1 | |
| L302 | | EL0606SK271K | 270μH | 1 | |
| L303 | | EL0606SK471K | 470μH | 1 | |
| L304,305 | | EL0606SK150K | 15μH | 2 | |
| L306 | | EL0606SK220K | 22μH | 1 | |
| L307 | | TLT102-999G | 1mH | 1 | |
| L308 | | EL0606SK220K | 22μH | 1 | |
| L309,310 | | EL0606SK101K | 100μH | 2 | |
| L311 | | ELT-7F004 | 100μH | 1 | |
| L312 | | EL0606SK330K | 33μH | 1 | |
| L313,314 | | EL0606SK271K | 270μH | 2 | |
| L315,316 | | EL0606SK101K | 100μH | 2 | |
| | | | | | |
| | | | LC Filters | | |
| LC301 | | ELB-5E020 | | 1 | |
| LC302 | | ELB-5F035 | | 1 | |
| LC303 | | ELB-5F036 | | 1 | |
| LC304 | | ELB-5E023 | | 1 | |
| LC305,306 | | ELB-5E022 | | 2 | |
| | | | | | |
| | | | | | |
| | | | Short Plugs | | |
| P301 | | EMCS0250Z | 2P | 1 | |
| P302 | | EMCS0850Z | 8P | 1 | |
| P303,304 | | EMCS0550Z | 5P | 2 | |
| P305 | | EMCS0350Z | 3P | 1 | |
| P306 | | EMCS0250Z | 2P | 1 | |
| | | | | | |
| | | | | | |
| | | | X'tals | | |
| X301 | | VLFW0007 | | 1 | |
| X302 | | VSXK0065 | | 1 | |
| | | | | | |
| | | | | | |
| | | | Delay Lines | | |
| DL301 | | EFDMN645K15E | | 1 | |
| DL302 | | ELB-5E021 | | 1 | |
| DL303 | | EFDVN645B15A | | 1 | |
| | | | | | |
| | | | | | |
| | | | Resistors Ass'y | | |
| RB301 | | EXB-H86261J | | 1 | |
| RB302 | | EXB-D86262J | | 1 | |
| | | | | | |

| Ref. No. | | Part No. | Part Name & Description | Pcs / Set | Remarks |
|---|---|---|---|---|---|
| | | | Miscellaneous | | |
| | | VEKW0349 | Connector Ass'y 4P | 1 | |
| | | VEKW0337 | Connector Ass'y 4P | 1 | |
| | | VEKW0351 | Connector Ass'y 5P | 1 | |
| | | VEKW0355 | Connector Ass'y 7P | 1 | |
| | | VEKW0332 | Connector Ass'y 2P | 1 | |
| | | VEKW0363 | Lug Terminal Ass'y | 1 | |
| | | VSCW0052 | DL Shield Board | 1 | |
| | | VXAW0013 | 14MHz CCD Shield Case | 1 | |
| | | | Ass'y | | |
| | | VSCW0051 | 14MHz CCD Shield Case (B) | 1 | |
| | | VEKW0380 | Connector Ass'y 2P | 1 | |
| | | VMZW0057 | 14MHz CCD Fiber Sheet | 1 | |
| | | | | | |
| | | | DEFLECTION C.B.A. | | |
| | | | | | |
| | | | Integrated Circuits | | |
| IC601 | | AN6050 | | 1 | |
| IC602 | | AN374P | | 1 | |
| IC603 | | AN6914 | | 1 | |
| IC604 | | AN6552 | | 1 | |
| | | | | | |
| | | | Transistors | | |
| Q602 | | 2SD636(Q,R) | | 1 | |
| Q603 | | 2SB641(Q,R) | | 1 | |
| Q604 | | 2SD636(Q,R) | | 1 | |
| Q605 | | 2SB641(Q,R) | | 1 | |
| Q606 | | 2SC1565A | | 1 | |
| Q608 | | 2SD662(Q,R) | | 1 | |
| Q609 | | 2SB641(Q,R) | | 1 | |
| Q610 | | 2SD636(Q,R) | | 1 | |
| Q611 | | 2SA1018(Q,R) | | 1 | |
| Q612,613 | | 2SD662(Q,R) | | 2 | |
| Q614 | | 2SB642(Q,R) | | 1 | |
| Q615 | | 2SD636(Q,R) | | 1 | |
| Q616 | | 2SA1018(Q,R) | | 1 | |
| Q617 | | 2SD662(Q,R) | | 1 | |
| Q618 | | 2SD636(Q,R) | | 1 | |
| Q619-621 | | 2SB641(Q,R) | | 3 | |
| Q622 | | 2SD636(Q,R) | | 1 | |
| Q623 | | 2SD662(R) | | 1 | |
| Q624 | | 2SB641(Q,R) | | 1 | |
| Q625 | | 2SD669A | | 1 | |
| Q626,627 | | 2SD636(Q,R) | | 2 | |
| Q628 | | 2SB641(S,T) | | 1 | |
| Q629,630 | | 2SD636(R,S) | | 2 | |
| Q631 | | 2SD636(Q,R) | | 1 | |

| Ref. No. | | Part No. | Part Name & Description | Pcs / Set | Remarks |
|---|---|---|---|---|---|
| Q632 | | 2SB793A | | 1 | |
| Q633 | | 2SC2206(C) | | 1 | |
| Q634 | | 2SD636(Q,R) | | 1 | |
| Q635 | | 2SD973A | | 1 | |
| Q636-638 | | 2SD636(Q,R) | | 3 | |
| Q639 | | 2SD973A | | 1 | |
| Q640,641 | | 2SD661(T,U) | | 2 | |
| Q6200,6201 | | 2SA1018(Q,R) | | 2 | |
| | | | | | |
| | | | | | |
| | | | | | |
| | | | Diodes | | |
| D601 | | MA165 | | 1 | |
| D602 | | ERB28-04D | | 1 | |
| D603 | | ES-1F | | 1 | |
| D604 | | ERB28-04D | | 1 | |
| D605 | | MA165 | | 1 | |
| D606 | | MA26W | | 1 | |
| D607-609 | | MA165 | | 3 | |
| D610,611 | | S5500B | | 2 | |
| D612 | | MZL306B | | 1 | |
| D613 | | 1S954 | | 1 | |
| D614 | | MA1100 | | 1 | |
| D615 | | OA90 | | 1 | |
| D616 | | MA165 | | 1 | |
| D617 | | MA26W | | 1 | |
| D618 | | RD4.7E | | 1 | |
| | | or A02-05CD | | | |
| D619,620 | | S5500B | | 2 | |
| D621 | | ERB28-04D | | 1 | |
| D622 | | MA165 | | 1 | |
| D623 | | MZ303A | | 1 | |
| | | | | | |
| | | | | | |
| | | | | | |
| | | | Resistors | | |
| R601 | | ERD10TJ753 | 75K | 1 | |
| R604 | | ERD10TJ682 | 6.8K | 1 | |
| R605 | | ERD10TJ681 | 680 | 1 | |
| R606 | | ERD10TJ222 | 2.2K | 1 | |
| R607 | | ERD10TJ390 | 39 | 1 | |
| R608 | | ERD10TJ682 | 6.8K | 1 | |
| R609 | | ERO50CKF5603 | 560K | 1 | |
| R610 | | ERD10TJ224 | 220K | 1 | |
| R611 | | ERD10TJ823 | 82K | 1 | |
| R612 | | ERD10TJ102 | 1K | 1 | |
| R613 | | ERD10TJ472 | 4.7K | 1 | |
| R614 | | ERD10TJ331 | 330 | 1 | |
| R615 | | ERD10TJ100 | 10 | 1 | |
| R616 | | ERD10TJ103 | 10K | 1 | |
| R617 | | ERD10TJ682 | 6.8K | 1 | |
| R618 | | ERD10TJ123 | 12K | 1 | |
| R620 | | ERD10TJ334 | 330K | 1 | |
| R621 | | ERD10TJ222 | 2.2K | 1 | |
| R623 | | ERD10TJ472 | 4.7K | 1 | |
| R624 | | ERD10TJ223 | 22K | 1 | |
| R625 | | ERD10TJ102 | 1K | 1 | |
| R626 | | ERD10TJ470 | 47 | 1 | |
| R627,628 | | ERD10TJ224 | 220K | 2 | |
| R634 | | ERD10TJ682 | 6.8K | 1 | |
| R635 | | ERD10TJ182 | 1.8K | 1 | |
| R636 | | ERD10TJ682 | 6.8K | 1 | |
| R637 | | ERD10TJ392 | 3.9K | 1 | |
| R638 | | ERD10TJ682 | 6.8K | 1 | |
| R639 | | ERD10TJ822 | 8.2K | 1 | |
| R640 | | ERD10TJ182 | 1.8K | 1 | |
| R641 | | ERD10TJ473 | 47K | 1 | |
| R642,643 | | ERD10TJ333 | 33K | 2 | |
| R644 | | ERD10TJ472 | 4.7K | 1 | |
| R645-647 | | ERD10TJ103 | 10K | 3 | |

| Ref. No. | | Part No. | Part Name & Description | Pcs / Set | Remarks |
|---|---|---|---|---|---|
| R648 | | ERD10TJ222 | 2.2K | 1 | |
| R649-656 | | ERD10TJ154 | 150K | 8 | |
| R657 | | ERD10TJ472 | 4.7K | 1 | |
| R658 | | ERD10TJ333 | 33K | 1 | |
| R659,660 | | ERD10TJ472 | 4.7K | 2 | |
| R661 | | ERD10TJ223 | 22K | 1 | |
| R662 | | ERD10TJ102 | 1K | 1 | |
| R663 | | ERD10TJ223 | 22K | 1 | |
| R664 | | ERD10TJ273 | 27K | 1 | |
| R665 | | ERD10TJ822 | 8.2K | 1 | |
| R666 | | ERD10TJ272 | 2.7K | 1 | |
| R667 | | ERD10TJ223 | 22K | 1 | |
| R668 | | ERD10TJ472 | 4.7K | 1 | |
| R669 | | ERD10TJ183 | 18K | 1 | |
| R671 | | ERD10TJ562 | 5.6K | 1 | |
| R672 | | ERD10TJ102 | 1K | 1 | |
| R673 | | ERD10TJ223 | 22K | 1 | |
| R674 | | ERD10TJ221 | 220 | 1 | |
| R675 | | ERD10TJ220 | 22 | 1 | |
| R676 | | ERD10TJ101 | 100 | 1 | |
| R677 | | ERD10TJ104 | 100K | 1 | |
| R678 | | ERD10TJ560 | 56 | 1 | |
| R679 | | ERD10TJ332 | 3.3K | 1 | |
| R680 | | ERD10TJ472 | 4.7K | 1 | |
| R681 | | ERD10TJ152 | 1.5K | 1 | |
| R682 | | ERD10TJ124 | 120K | 1 | |
| R683 | | ERD10TJ392 | 3.9K | 1 | |
| R684 | | ERD10TJ104 | 100K | 1 | |
| R685 | | ERD10TJ103 | 10K | 1 | |
| R686 | | ERG1ANJ330 | 1W 33 | 1 | |
| R687 | | ERG1ANJ820 | 1W 82 | 1 | |
| R688 | | ERD10TJ562 | 5.6K | 1 | |
| R689 | | ERD10TJ682 | 6.8K | 1 | |
| R690 | | ERD10TJ222 | 2.2K | 1 | |
| R691 | | ERD10TJ562 | 5.6K | 1 | |
| R692 | | ERD10TJ392 | 3.9K | 1 | |
| R693 | | ERD10TJ562 | 5.6K | 1 | |
| R694 | | ERD10TJ823 | 82K | 1 | |
| R695 | | ERDS2TJ471 | 1/4W 470 | 1 | |
| R696 | | ERD10TJ223 | 22K | 1 | |
| R697 | | ERD10TJ562 | 5.6K | 1 | |
| R698 | | ERD10TJ103 | 10K | 1 | |
| R699 | | ERD10TJ823 | 82K | 1 | |
| R6100 | | ERD10TJ101 | 100 | 1 | |
| R6101 | | ERD10TJ332 | 3.3K | 1 | |
| R6102 | | ERD10TJ561 | 560 | 1 | |
| R6103 | | ERD10TJ152 | 1.5K | 1 | |
| R6104 | | ERD10TJ681 | 680 | 1 | |
| R6105 | | ERD10TJ223 | 22K | 1 | |
| R6106 | | ERD10TJ100 | 10 | 1 | |
| R6107 | | ERD10TJ562 | 5.6K | 1 | |
| R6108 | | ERD10TJ122 | 1.2K | 1 | |
| R6109 | | ERD10TJ333 | 33K | 1 | |
| R6110 | | ERD10TJ181 | 180 | 1 | |
| R6111 | | ERD10TJ472 | 4.7K | 1 | |
| R6112 | | ERD10TJ152 | 1.5K | 1 | |
| R6113 | | ERD10TJ562 | 5.6K | 1 | |
| R6114 | | ERD10TJ222 | 2.2K | 1 | |
| R6115 | | ERD10TJ223 | 22K | 1 | |
| R6116 | | ERD10TJ334 | 330K | 1 | |
| R6117 | | ERD10TJ223 | 22K | 1 | |
| R6118 | | ERDS2TJ471 | 1/4W 470 | 1 | |
| R6119 | | ERD10TJ273 | 27K | 1 | |
| R6120 | | ERD10TJ102 | 1K | 1 | |
| R6121 | | ERD10TJ273 | 27K | 1 | |
| R6122 | | ERDS2TJ222 | 1/4W 2.2K | 1 | |
| R6123 | | ERO10CKF1002 | 10K | 1 | |
| R6124 | | ERO10CKF3302 | 33K | 1 | |
| R6125 | | ERD10TJ222 | 2.2K | 1 | |
| R6126 | | ERD10TJ224 | 220K | 1 | |

| Ref. No. | | Part No. | Part Name & Description | Pcs / Set | Remarks |
|---|---|---|---|---|---|
| R6127 | | ERD10TJ221 | 220 | 1 | |
| R6128 | | ERD10TJ562 | 5.6K | 1 | |
| R6129 | | ERD10TJ104 | 100K | 1 | |
| R6130 | | ERD10TJ333 | 33K | 1 | |
| R6131 | | ERD10TJ332 | 3.3K | 1 | |
| R6132 | | ERD10TJ223 | 22K | 1 | |
| R6133 | | ERD10TJ104 | 100K | 1 | |
| R6134 | | ERD10TJ223 | 22K | 1 | |
| R6135 | | ERD10TJ100 | 10 | 1 | |
| R6136 | | ERD10TJ102 | 1K | 1 | |
| R6137 | | ER010CKF1001 | 1K | 1 | |
| R6200 | | ERD10TJ471 | 470 | 1 | |
| R6201 | | ERD10TJ682 | 6.8K | 1 | |
| R6202,6203 | | ERD10TJ102 | 1K | 2 | |
| R6204 | | ERD10TJ123 | 12K | 1 | |
| R6205 | | ERD10TJ273 | 27K | 1 | |
| | | | | | |
| | | | | | |
| | | | Variable Resistors | | |
| VR601 | | EVM3AGA00B16 | 1M | 1 | |
| VR602 | | EVM3AGA00B35 | 300K | 1 | |
| VR603 | | EVN3ACA00B34 | 30K | 1 | |
| VR604 | | EVM3AGA00B16 | 1M | 1 | |
| VR605 | | EVM3AGA00B55 | 500K | 1 | |
| VR606 | | EVN3ACA00B34 | 30K | 1 | |
| VR607,608 | | EVN-3ACA00B14 | 10K | 2 | |
| VR609-612 | | EVN3ACA00B53 | 5K | 4 | |
| VR613-620 | | EVN3ACA00B15 | 100K | 8 | |
| VR621 | | EVN3ACA00B33 | 3K | 1 | |
| VR622 | | EVM3AGA00B12 | 100 | 1 | |
| VR623 | | EVN3ACA00B34 | 30K | 1 | |
| VR624 | | EVN3ACA00B33 | 3K | 1 | |
| VR625 | | EVN3ACA00B13 | 1K | 1 | |
| VR6200 | | EVN3ACA00B14 | 10K | 1 | |
| | | | | | |
| | | | Capacitors | | |
| C601 | | ECEA2AS010 | Electrolytic 100V 1 | 1 | |
| C602 | | ECQM1H222MZ | Mylar 50V 0.0022 | 1 | |
| C603 | | ECSF10E10 | Tantalum 10V 10 | 1 | |
| C604 | | ECCR1H271J5 | Ceramic 50V 270P | 1 | |
| C605 | | ECQV05154JZ | Mylar 50V 0.15 | 1 | |
| C606 | | ECEA1AK330 | Electrolytic 10V 33 | 1 | |
| C607 | | ECEA1AK470 | Electrolytic 10V 47 | 1 | |
| C608 | | ECQM1H472MZ | Mylar 50V 0.0047 | 1 | |
| C609 | | ECSF35E2R2 | Tantalum 35V 2.2 | 1 | |
| C610 | | ECEA1ASS221 | Electrolytic 10V 220 | 1 | |
| C611 | | ECQM1H103MZ | Mylar 50V 0.01 | 1 | |
| C612 | | ECEA1AK470 | Electrolytic 10V 47 | 1 | |
| C613 | | ECQF6152KZ | Mylar 630V 0.0015 | 1 | |
| C614,615 | | ECEA1CK100 | Electrolytic 16V 10 | 2 | |
| C616 | | ECQM1H272MZ | Mylar 50V 0.0027 | 1 | |
| C617 | | ECSF10E47 | Tantalum 10V 47 | 1 | |
| C618 | | ECQM1H472MZ | Mylar 50V 0.0047 | 1 | |
| C619 | | ECQM1H102MZ | Mylar 50V 0.001 | 1 | |
| C620 | | ECEA1CK100 | Electrolytic 16V 10 | 1 | |
| C622 | | ECQE10472MV | Mylar 1KV 0.0047 | 1 | |
| C623 | | ECEA1HK100 | Electrolytic 50V 10 | 1 | |
| C624 | | ECEA2WS010 | Electrolytic 450V 1 | 1 | |
| C625 | | ECQM4472MZ | Mylar 400V 0.0047 | 1 | |
| C626,627 | | ECEA2CS010 | Electrolytic 160V 1 | 2 | |
| C629 | | ECEA1HK010 | Electrolytic 50V 1 | 1 | |
| C630 | | ECEA1ASS101 | Electrolytic 10V 100 | 1 | |
| C631-633 | | ECEA1CK100 | Electrolytic 16V 10 | 3 | |
| C634 | | ECEA1ASS101 | Electrolytic 10V 100 | 1 | |
| C635 | | ECQE4473MZ | Mylar 400V 0.047 | 1 | |
| C636 | | ECEA2AS010 | Electrolytic 100V 1 | 1 | |
| C637 | | ECEA1CK100 | Electrolytic 16V 10 | 1 | |
| C638 | | ECQF6152KZ | Mylar 630V 0.0015 | 1 | |
| C639 | | ECEA1AK470 | Electrolytic 10V 47 | 1 | |
| C640 | | ECEA1HN3R3 | Electrolytic 50V 3.3 | 1 | |

| Ref. No. | | Part No. | Part Name & Description | Pcs / Set | Remarks |
|---|---|---|---|---|---|
| C641 | | ECQM4472MZ | Mylar 400V 0.0047 | 1 | |
| C642 | | ECCR1H101J5 | Ceramic 50V 100P | 1 | |
| C643 | | ECEA1HK3R3 | Electrolytic 50V 3.3 | 1 | |
| C644 | | ECCR1H391J5 | Ceramic 50V 390P | 1 | |
| C645 | | ECKR1H102KB5 | Ceramic 50V 1000P | 1 | |
| C646 | | ECCR1H121J5 | Ceramic 50V 120P | 1 | |
| C647 | | ECEA1ASS101 | Electrolytic 10V 100 | 1 | |
| C648 | | ECQP1331JZ | Mylar 100V 330P | 1 | |
| C649 | | ECQM1H102MZ | Mylar 50V 0.001 | 1 | |
| C650 | | ECSF6E68 | Tantalum 6.3V 68 | 1 | |
| C651 | | ECQM1H472MZ | Mylar 50V 0.0047 | 1 | |
| C652 | | ECKF1H561KB | Ceramic 50V 560P | 1 | |
| C653 | | ECCR1H181J5 | Ceramic 50V 180P | 1 | |
| C654,655 | | ECEA1HK010 | Electrolytic 50V 1 | 2 | |
| C656 | | ECQV05563JZ | Mylar 50V 0.056 | 1 | |
| C657 | | ECKF1H561KB | Ceramic 50V 560P | 1 | |
| C658 | | ECSF10E47 | Tantalum 10V 47 | 1 | |
| C659 | | ECEA1ASS221 | Electrolytic 10V 220 | 1 | |
| C660 | | ECCR1H221J5 | Ceramic 50V 220P | 1 | |
| C661 | | ECEA1HK010 | Electrolytic 50V 1 | 1 | |
| C662 | | ECEA1ESS470 | Electrolytic 25V 47 | 1 | |
| C663 | | ECEA1ASS471 | Electrolytic 10V 470 | 1 | |
| C664 | | ECSF10E47 | Tantalum 10V 47 | 1 | |
| C665 | | ECSF10E10 | Tantalum 10V 10 | 1 | |
| C666 | | ECEA1CK100 | Electrolytic 16V 10 | 1 | |
| C667 | | ECKF1H561KB | Ceramic 50V 560P | 1 | |
| C668 | | ECEA1ESS470 | Electrolytic 25V 47 | 1 | |
| C669 | | ECEA1HKR47 | Electrolytic 50V 0.47 | 1 | |
| C670 | | ECEA1CK220 | Electrolytic 16V 22 | 1 | |
| C671 | | ECEA1ASS101 | Electrolytic 10V 100 | 1 | |
| C672 | | ECSF35E2R2 | Tantalum 35V 2.2 | 1 | |
| C674 | | ECEA1ASS101 | Electrolytic 10V 100 | 1 | |
| C676 | | ECQM1H472MZ | Mylar 50V 0.0047 | 1 | |
| C677 | | ECEA0JK330 | Electrolytic 6.3V 33 | 1 | |
| C678 | | ECEA1HKN010 | Electrolytic 50V 1 | 1 | |
| C679,680 | | ECSF16FR47 | Tantalum 16V 0.47 | 2 | |
| C6200 | | ECQV05104JZ | Mylar 50V 0.1 | 1 | |
| C6201 | | ECCR1H101J5 | Ceramic 50V 100P | 1 | |
| C6202 | | ECQE1104KN | Mylar 100V 0.1 | 1 | |
| C6203 | | ECKR1H103ZF5 | Ceramic 50V 0.01 | 1 | |
| | | | | | |
| | | | | | |
| | | | | | |
| | | | Coils | | |
| L601 | | VLQ7H101K | 100μH | 1 | |
| L602 | | VLQ7H101K | 100μH | 1 | |
| L603 | | VLQ9H333J | 33mH | 1 | |
| L604 | | VLQ7H101K | 100μH | 1 | |
| L605 | | FL9H501K-23 | 500μH | 1 | |
| L606 | | VLQ9H333J | 33mH | 1 | |
| | | | | | |
| | | | | | |
| | | | | | |
| | | | Short Plugs | | |
| P601 | | EMCS0350Z | 3P | 1 | |
| P602 | | EMCS0650Z | 6P | 1 | |
| P603 | | EMCS0450Z | 4P | 1 | |
| P604 | | EMCS0250Z | 2P | 1 | |
| P605 | | EMCS0350Z | 3P | 1 | |
| P606 | | EMCS0250Z | 2P | 1 | |
| P607 | | EMCS0350Z | 3P | 1 | |
| P608 | | EMCS0350Z | 3P | 1 | |
| P609 | | EMCS0650Z | 6P | 1 | |
| P610,611 | | EMCS0550Z | 5P | 2 | |
| P612 | | EMCS0450Z | 4P | 1 | |
| P613 | | EMCS0750Z | 7P | 1 | |
| P614 | | EMCS0450Z | 4P | 1 | |
| P615-617 | | EMCS0250Z | 2P | 3 | |
| | | | | | |
| | | | | | |

| Ref. No. | Part No. | Part Name & Description | Pcs / Set | Remarks |
|---|---|---|---|---|
| | | Miscellaneous | | |
| F601 | XEA1H16NU100 | Fuse | 1 | |
| T601 | TLF69955 | F.B.T | 1 | |
| SW601 | VSSW0019 | Mode Selection SW | 1 | |
| | VEKW0095 | Lug Terminal Ass'y | 1 | |
| | VSCW0049 | AVR Shield Case | 1 | |
| | VEKW0381 | 2P Connector Ass'y | 1 | |
| | | REAR SIDE C.B.A. | | |
| | | Resistor | | |
| R501 | ERDS2TJ560 | 1/4W 56 | 1 | |
| | | Miscellaneous | | |
| SW501 | ESD-32166 | Stand By SW | 1 | |
| | VEKW0330 | Connector Ass'y 3P | 1 | |
| | VEKW0341 | Connector Ass'y 5P | 1 | |
| | VEKW0339 | Connector Ass'y 3P | 1 | |
| SW502 | ESD-14194 | Nega-Posi Reverse SW | 1 | |
| | | REMO. CON. SW C.B.A. | | |
| | VEKW0338 | Connector Ass'y 2P | 1 | |
| | VSSW0023 | Remo. Con. SW | 1 | |
| | | POWER ZOOM SW A C.B.A. | | |
| | | Transistors | | |
| Q801-804 | 2SD636(Q,R,S) | | 4 | |
| | | Resistors | | |
| R801 | ERD10TJ561 | 560 | 1 | |
| R802 | ERD10TJ560 | 56 | 1 | |
| R803,804 | ERD10TJ103 | 10K | 2 | |
| R805,806 | ERD10TJ822 | 8.2K | 2 | |
| | | Variable Resistor | | |
| VR801 | EVJFDAF20B53 | 5K | 1 | |
| | | Capacitor | | |
| C801 | ECEA1ASS221 | Electrolytic 10V 220 | 1 | |
| | | Short Plug | | |
| P801 | EMCS0250Z | 2P | 1 | |
| | | Switch | | |
| SW801 | VSSW0022 | Power Zoom SW | 1 | |

| Ref. No. | Part No. | Part Name & Description | Pcs / Set | Remarks |
|---|---|---|---|---|
| | | Miscellaneous | | |
| | VEKW0335 | Connector Ass'y 2P | 1 | |
| | VEKW0334 | Connector Ass'y 2P | 1 | |
| | | POWER ZOOM SW B C.B.A. | | |
| | VEKW0357 | Connector Ass'y 2P | 1 | |
| | VSSW0022 | Power Zoom SW | 1 | |
| | | FRONT C.B.A. | | |
| | | Variable Resistor | | |
| VR802 | EFDFEAF20B24 | | 1 | |
| | | Miscellaneous | | |
| | VEKW0352 | Connector Ass'y 5P | 1 | |
| | VSSW0023 | A.W.C. SW | 1 | |
| | | SPECIAL TUBE SOCKET C.B.A. | | |
| | | Resistor | | |
| R619 | ERD25TJ105 | 1/4W 1M | 1 | |
| | | Capacitor | | |
| C621 | ECQE16682N67 | Mylar 1.6KV 0.0068 | 1 | |
| | | Miscellaneous | | |
| | VJSK1116 | Special Tube Socket | 1 | |
| | VEKW0360 | Camera Cable Ass'y | 1 | |
| | VEKW0348 | 10P Socket Ass'y | 1 | |
| | VEKW0358 | Connector Ass'y 2P | 1 | |
| | VEKW0367 | Power Transistor Ass'y | 1 | |
| | ECKX2H102ZE | Ceramic 500V 1000P | 1 | |
| | VEKW0365 | Motor Ass'y | 1 | |
| | ELY-18A208D | DY Ass'y | 1 | |
| | K4103 | Special Tube | 1 | |

| Ref. No. | | Part No. | Part Name & Description | Pcs / Set | Remarks |
|---|---|---|---|---|---|
| | | | CAMERA REMO. CON. H C.B.A. | | |
| | | | Integrated Circuits | | |
| IC701 | | EHM-K046W66K | Hi-Mic | 1 | |
| IC702 | | MN1227A | | 1 | |
| | | | Transistors | | |
| Q701 | | 2SB709 | | 1 | |
| Q702,703 | | 2SC2404 | | 2 | |
| Q704-708 | | 2SB709 | | 5 | |
| Q709,710 | | 2SD601 | | 2 | |
| | | | Diode | | |
| D701 | | OA90 | | 1 | |
| | | | Resistors | | |
| R701 | | ERJ8GCJ273 | Chip 27K | 1 | |
| R702 | | ERJ8GCJ182 | Chip 1.8K | 1 | |
| R703 | | ERJ8GCJ121 | Chip 120 | 1 | |
| R704 | | ERJ8GCJ102 | Chip 1K | 1 | |
| R705 | | ERJ8GCJ100 | Chip 10 | 1 | |
| R706 | | ERJ8GCJ222 | Chip 2.2K | 1 | |
| R707 | | ERO10CKF1203 | 120K | 1 | |
| R708 | | ERJ8GCJ103 | Chip 10K | 1 | |
| R709 | | ERO10CKF4702 | 47K | 1 | |
| R710 | | ERO10CKF2202 | 22K | 1 | |
| R711 | | ERJ8GCJ103 | Chip 10K | 1 | |
| R712 | | ERO10CKF2202 | 22K | 1 | |
| R713 | | ERO10CKF5602 | 56K | 1 | |
| R714 | | ERJ8GCJ102 | Chip 1K | 1 | |
| R715 | | ERJ8GCJ153 | Chip 15K | 1 | |
| R716 | | ERJ8GCJ562 | Chip 5.6K | 1 | |
| R717 | | ERJ8GCJ103 | Chip 10K | 1 | |
| R718 | | ERJ8GCJ472 | Chip 4.7K | 1 | |
| R719 | | ERJ8GCJ103 | Chip 10K | 1 | |
| R720 | | ERJ8GCJ472 | Chip 4.7K | 1 | |
| R721 | | ERJ8GCJ153 | Chip 15K | 1 | |
| R722 | | ERJ8GCJ151 | Chip 150 | 1 | |
| R723 | | ERJ8GCJ394 | Chip 390K | 1 | |
| R724-726 | | ERJ8GCJ103 | Chip 10K | 3 | |
| R727-735 | | ERJ8GCJ102 | Chip 1K | 9 | |
| | | | Variable Resistor | | |
| VR701 | | EVN3ACA00B53 | 5K | 1 | |
| | | | Capacitors | | |
| C701 | | ECEA1CN10U | Electrolytic 16V 10 | 1 | |
| C702 | | ECEA1HK3R3 | Electrolytic 50V 3.3 | 1 | |
| C703,704 | | ECUV1H103ZFM | Chip Ceramic 50V 0.01 | 2 | |
| C705 | | ECUV1H470JM | Chip Ceramic 50V 47P | 1 | |
| C706 | | ECEA1HKR47 | Electrolytic 50V 0.47 | 1 | |
| C707 | | ECSF10E10 | Tantalum 10V 10 | 1 | |
| C708 | | ECSF6E47 | Tantalum 6.3V 47 | 1 | |
| C709 | | ECSF10E47 | Tantalum 10V 47 | 1 | |
| | | | Coil | | |
| L701 | | ELO606SK101K | 100μH | 1 | |

| Ref. No. | | Part No. | Part Name & Description | Pcs / Set | Remarks |
|---|---|---|---|---|---|
| | | | CAMERA REMO. CON. M C.B.A. | | |
| | | | Integrated Circuits | | |
| IC703 | | μPD7507G51400 | L.S.I. | 1 | |
| IC704 | | NJM2903M | | 1 | |
| | | | Transistors | | |
| Q711 | | 2SC2404 | | 1 | |
| Q712 | | 2SB709 | | 1 | |
| Q713 | | 2SD601 | | 1 | |
| Q714 | | 2SD601A | | 1 | |
| Q715,716 | | 2SD601 | | 2 | |
| | | | Diodes | | |
| D702-706 | | MA151K | | 5 | |
| D707 | | MA151A | | 1 | |
| D708 | | MA151K | | 1 | |
| D709 | | MA151A | | 1 | |
| D710 | | MA151K | | 1 | |
| D711,712 | | MA151A | | 2 | |
| | | | Resistors | | |
| R736 | | ERJ8GCJ104 | Chip 100K | 1 | |
| R737 | | ERJ8GCJ563 | Chip 56K | 1 | |
| R738 | | ERJ8GCJ102 | Chip 1K | 1 | |
| R739,740 | | ERJ8GCJ563 | Chip 56K | 2 | |
| R741-743 | | ERJ8GCJ102 | Chip 1K | 3 | |
| R744-747 | | ERJ8GCJ563 | Chip 56K | 4 | |
| R748 | | ERJ8GCJ101 | Chip 100 | 1 | |
| R749-751 | | ERJ8GCJ103 | Chip 10K | 3 | |
| R752 | | ERJ8GCJ223 | Chip 22K | 1 | |
| R753,754 | | ERJ8GCJ222 | Chip 2.2K | 2 | |
| R755 | | ERJ8GCJ104 | Chip 100K | 1 | |
| R756 | | ERD10TJ272 | 2.7K | 1 | |
| R757 | | ERJ8GCJ224 | Chip 220K | 1 | |
| R758 | | ERJ8GCJ222 | Chip 2.2K | 1 | |
| R759 | | ERJ8GCJ103 | Chip 10K | 1 | |
| R760 | | ERJ8GCJ222 | Chip 2.2K | 1 | |
| R762 | | ERJ8GCJ472 | Chip 4.7K | 1 | |
| R763,764 | | ERJ8GCJ473 | Chip 47K | 2 | |
| R765 | | ERJ8GCJ224 | Chip 220K | 1 | |
| R766 | | ERO10CKF2403 | 240K | 1 | |
| R767 | | ERJ8GCJ103 | Chip 10K | 1 | |
| R768,769 | | ERJ8GCJ223 | Chip 22K | 2 | |
| R770 | | ERJ8GCJ563 | Chip 56K | 1 | |
| R771 | | ERJ8GCJ104 | Chip 100K | 1 | |
| R772 | | ERJ8GCJ223 | Chip 22K | 1 | |
| R773 | | ERJ8GCJ563 | Chip 56K | 1 | |
| R779 | | ERJ8GCJ222 | Chip 2.2K | 1 | |
| | | | Capacitors | | |
| C710,711 | | ECU-V1H330JM | Chip Ceramic 50V 33P | 2 | |
| C712 | | ECU-V1H101JM | Chip Ceramic 50V 100P | 1 | |
| C713 | | ECCF1H270JU | Ceramic 50V 27P | 1 | |
| C714 | | ECEA0JK470 | Electrolytic 6.3V 47 | 1 | |
| | | | X'tal | | |
| X701 | | VSXW0006 | | 1 | |

| Ref. No. | | Part No. | Part Name & Description | Pcs / Set | Remarks |
|---|---|---|---|---|---|
| | | | CAMERA REMO. CON. S C.B.A. | | |
| | | | Diodes | | |
| D713 | | MA151WA | Chip | 1 | |
| D714 | | MA151K | Chip | 1 | |
| D715 | | MA151WA | Chip | 1 | |
| D716 | | MA151K | Chip | 1 | |
| | | | Resistors | | |
| R774-777 | | ERJ8GCJ102 | Chip 1K | 4 | |
| R778 | | ERJ8GCJ563 | 56K | 1 | |
| | | | Miscellaneous | | |
| | | EVQ-QS107K | Display SW | 1 | |
| | | EVQ-QS107K | P/P SW | 1 | |
| | | EVQ-QS107K | Rev. SW | 1 | |
| | | VSSW0021 | Title Selection SW | 1 | |
| | | EVQ-QS107K | Insert SW | 1 | |
| | | VSSW0020 | Fade Selection SW | 1 | |
| | | VSSW0025 | VTR/CAMERA Selection SW | 1 | |
| | | EVQ-QS107K | Slow SW | 1 | |
| | | EVQ-QS107K | Cue SW | 1 | |
| | | | CAMERA REMO. CON. ETC. | | |
| | | VEKW0372 | PC Joiner (C) | 1 | |
| | | VEKW0336 | Connector Ass'y 2P | 1 | |
| | | VEKW0342 | Connector Ass'y 3P | 1 | |
| | | VEKW0350 | Connector Ass'y 5P | 1 | |
| | | VEKW0354 | Connector Ass'y 8P | 1 | |
| | | VEKW0364 | EXT. Mic Socket Ass'y | 1 | |
| | | VSCW0054 | Shield Case (A) | 1 | |
| | | VSCW0055 | Shield Case (B) | 1 | |
| | | VMZW0061 | Fiber Sheet (A) | 1 | |
| | | VMZW0062 | Fiber Sheet (B) | 1 | |
| | | VMZW0063 | Fiber Sheet (C) | 1 | |
| | | VEKW0344 | Connector Ass'y 5P | 1 | |
| | | VEKW0373 | PC Joiner (D) | 1 | |
| | | VEKW0371 | PC Joiner (B) | 1 | |
| | | VEKW0370 | PC Joiner (A) | 1 | |

| Ref. No. | | Part No. | Part Name & Description | Pcs / Set | Remarks |
|---|---|---|---|---|---|
| | | | EVF C.B.A. | | |
| | | | Integrated Circuit | | |
| IC901 | | AN374P | | 1 | |
| | | | Transistors | | |
| Q901 | | 2SD601 | | 1 | |
| Q902 | | 2SD662(Q,R) | | 1 | |
| Q903 | | 2SB709A | | 1 | |
| Q904 | | 2SD601A | | 1 | |
| Q905 | | 3SF11(Q) | | 1 | |
| Q906 | | 2SB709A | | 1 | |
| Q907 | | 2SC2295 | | 1 | |
| Q908 | | 2SD968 | | 1 | |
| Q9100-9102 | | 2SD601 | | 3 | |
| | | | Diodes | | |
| D901-905 | | MA165 | | 5 | |
| D907 | | S1B01-01 | | 1 | |
| D909 | | S1B01-01 | | 1 | |
| D913 | | BR5704S | | 1 | |
| | | | Resistors | | |
| R901 | | ERJ8GCJ683 | Chip 68K | 1 | |
| R902 | | ERJ8GCJ153 | Chip 15K | 1 | |
| R903 | | ERJ8GCJ222 | Chip 2.2K | 1 | |
| R904 | | ERJ8GCJ391 | Chip 390 | 1 | |
| R905 | | ERJ8GCJ561 | Chip 560 | 1 | |
| R906 | | ERJ8GCJ333 | Chip 33K | 1 | |
| R907 | | ERJ8GCJ562 | Chip 5.6K | 1 | |
| R908 | | ERJ8GCJ102 | Chip 1K | 1 | |
| R909 | | ERJ8GCJ183 | Chip 18K | 1 | |
| R911 | | ERJ8GCJ151 | Chip 150 | 1 | |
| R912 | | ERJ8GCJ334 | Chip 330K | 1 | |
| R913 | | ERJ8GCJ391 | Chip 390 | 1 | |
| R915 | | ERJ8GCJ153 | Chip 15K | 1 | |
| R916 | | ERJ8GCJ332 | Chip 3.3K | 1 | |
| R917 | | ERJ8GCJ223 | Chip 22K | 1 | |
| R918 | | ERJ8GCJ472 | Chip 4.7K | 1 | |
| R919 | | ERJ8GCJ683 | Chip 68K | 1 | |
| R920 | | ERJ8GCJ101 | Chip 100 | 1 | |
| R921 | | ERJ8GCJ102 | Chip 1K | 1 | |
| R922,923 | | ERJ8GCJ334 | Chip 330K | 2 | |
| R924 | | ERJ8GCJ562 | Chip 5.6K | 1 | |
| R925 | | ERJ8GCJ223 | Chip 22K | 1 | |
| R926 | | ERJ8GCJ333 | Chip 33K | 1 | |
| R927 | | ERJ8GCJ153 | Chip 15K | 1 | |
| R928 | | ERJ8GCJ822 | Chip 8.2K | 1 | |
| R929 | | ERJ8GCJ103 | Chip 10K | 1 | |
| R930 | | ERJ8GCJ223 | Chip 22K | 1 | |
| R931 | | ERJ8GCJ2R7 | Chip 2.7 | 1 | |
| R932 | | ERJ8GCJ102 | Chip 1K | 1 | |
| R933 | | ERJ8GCJ272 | Chip 2.7K | 1 | |
| R934 | | ERJ8GCJ563 | Chip 56K | 1 | |
| R935 | | ERJ8GCJ123 | Chip 12K | 1 | |
| R936 | | ERJ8GCJ391 | Chip 390 | 1 | |
| R937 | | ERJ8GCJ222 | Chip 2.2K | 1 | |
| R938 | | ERJ8GCJ821 | Chip 820 | 1 | |
| R939 | | ERJ8GCJ223 | Chip 22K | 1 | |
| R940 | | ERJ8GCJ270 | Chip 27 | 1 | |
| R941 | | ERJ8GCJ331 | Chip 330 | 1 | |
| R942,943 | | ERJ8GCJ102 | Chip 1K | 2 | |
| R945 | | ERJ8GCJ102 | Chip 1K | 1 | |

| Ref. No. | Part No. | Part Name & Description | Pcs / Set | Remarks |
|---|---|---|---|---|
| R946 | ERDS2TJ273 | 1/4W 27K | 1 | |
| R949 | ERDS2TJ125 | 1/4W 1.2M | 1 | |
| R950 | ERJ8GCJ152 | Chip 1.5K | 1 | |
| R951 | ERJ8GCJ105 | Chip 1M | 1 | |
| R952 | ERJ8GCJ334 | Chip 330K | 1 | |
| R953 | ERJ8GCJ220 | Chip 22 | 1 | |
| R954 | ERJ8GCJ563 | Chip 56K | 1 | |
| R955 | ERJ8GCJ221 | Chip 220 | 1 | |
| R956 | ERJ8GCJ561 | Chip 560 | 1 | |
| R957 | ERD25VJ335 | 1/4W 3.3M | 1 | |
| R958 | ERJ8GCJ474 | Chip 470K | 1 | |
| R9100 | ERJ8GCJ471 | Chip 470 | 1 | |
| R9101 | ERJ8GCJ102 | Chip 1K | 1 | |
| R9102,9103 | ERJ8GCJ823 | Chip 82K | 2 | |
| R9104 | ERJ8GCJ102 | Chip 1K | 1 | |
| R9105 | ERJ8GCJ562 | Chip 5.6K | 1 | |
| R9106 | ERJ8GCJ152 | Chip 1.5K | 1 | |
| | | Variable Resistors | | |
| VR902 | EVN3ACA00B52 | 500 | 1 | |
| VR903,904 | EVM7AGA00B26 | 2M | 2 | |
| | | Capacitors | | |
| C901 | ECEA1ASS101 | Electrolytic 10V 100 | 1 | |
| C902 | ECEA1CN10U | Electrolytic 16V 10 | 1 | |
| C903 | ECUV1H271JM | Chip Ceramic 50V 270P | 1 | |
| C905 | ECEA1AK470 | Electrolytic 10V 47 | 1 | |
| C906 | ECUV1H331JM | Chip Ceramic 50V 330P | 1 | |
| C907 | ECEA1HK3R3 | Electrolytic 50V 3.3 | 1 | |
| C908 | ECUV1H103ZFM | Chip Ceramic 50V 0.01 | 1 | |
| C909 | ECEA1HKNR47 | Electrolytic 50V 0.47 | 1 | |
| C910 | ECEA1AK330 | Electrolytic 10V 33 | 1 | |
| C911 | ECUV1H100JM | Chip Ceramic 50V 10P | 1 | |
| C912 | ECEA1JS220 | Electrolytic 63V 22 | 1 | |
| C913 | ECEA1CSS471 | Electrolytic 16V 470 | 1 | |
| C914 | ECSF10E2R2 | Tantalum 10V 2.2 | 1 | |
| C915 | ECSF10E10 | Tantalum 10V 10 | 1 | |
| C916 | ECUV1H103ZFM | Chip Ceramic 50V 0.01 | 1 | |
| C917 | ECEA1HK3R3 | Electrolytic 50V 3.3 | 1 | |
| C918 | ECEA0JS102S | Electrolytic 6.3V 1000 | 1 | |
| C919 | ECUV1H272KBM | Chip Ceramic 50V 2700P | 1 | |
| C920 | ECUV1H103ZFM | Chip Ceramic 50V 0.01 | 1 | |
| C921 | ECEA1HK3R3 | Electrolytic 50V 3.3 | 1 | |
| C922 | ECQV05223JZ | Mylar 50V 0.022 | 1 | |
| C923 | ECQV05154JZ | Mylar 50V 0.15 | 1 | |
| C925 | VCAMS100V392J | Mylar 100V 0.0039 | 1 | |
| C926 | ECEA1CSS471 | Electrolytic 16V 470 | 1 | |
| C928 | ECQE1104KN | Mylar 100V 0.1 | 1 | |
| C929 | ECKD3A392KB | Ceramic 1KV 0.0039 | 1 | |
| C930 | ECQE2104KS | Mylar 200V 0.1 | 1 | |
| C931 | ECKD3A152KB | Ceramic 1KV 0.0015 | 1 | |
| C932 | ECQE2104KS | Mylar 200V 0.1 | 1 | |
| C933 | ECUV1H473JM | Chip Ceramic 50V 0.047 | 1 | |
| C934 | ECEA1JS100 | Electrolytic 63V 10 | 1 | |
| C9100 | ECEA1CK100 | Electrolytic 16V 10 | 1 | |
| C9101,9102 | ECEA1HK010 | Electrolytic 50V 1 | 2 | |
| | | Coils | | |
| L902 | KLH-11A | Linearity Coil | 1 | |
| L903 | VLQ7H101K | 100μH | 1 | |
| L904 | VLQ9H391K | 390μH | 1 | |
| L905 | TLH6307-1 | | 1 | |

| Ref. No. | Part No. | Part Name & Description | Pcs / Set | Remarks |
|---|---|---|---|---|
| | | Short Plugs | | |
| P901 | EMCS0350Z | 3P | 1 | |
| P902 | EMCS0550Z | 5P | 1 | |
| P903 | EMCS0450Z | 4P | 1 | |
| P904 | EMCS0650Z | 6P | 1 | |
| P905 | EMCS0250Z | 2P | 1 | |
| | | F.B.T. | | |
| T901 | TLF69954 or | | 1 | |
| | ETF-19L1A | | | |
| | | Switch | | |
| SW901 | VSSW0026 | R.L Selection SW | 1 | |
| | | Miscellaneous | | |
| | VEKW0379 | CRT Socket Ass'y | 1 | |
| | | EVF-LED C.B.A. | | |
| | | Diodes | | |
| D911 | TLG124A | Tally | 1 | |
| D912 | TLRG101 | A.W.C. | 1 | |
| D920 | TL0124 | Under | 1 | |
| | | Miscellaneous | | |
| | VEKW0374 | Connector Ass'y 6P | 1 | |
| | VXFW0009 | LED Spacer Ass'y | 1 | |
| | VEKW0378 | Ground Spring Ass'y | 1 | |
| | | EVF (ETC.) C.B.A. | | |
| | 30DB4 | CRT | 1 | |
| | VXMW0023 | Int. Mic Ass'y | 1 | |
| | ELY-10V001A | DY Ass'y | 1 | |
| | VEKW0359 | 10P Cable Ass'y | 1 | |
| | VEKW0387 | Tally LED Ass'y | 1 | |
| | | BIAS LIGHT A C.B.A. | | |
| | PG2222SX | Bias Light | 3 | |
| | | BIAS LIGHT B C.B.A. | | |
| | PG2222SX | Bias Light | 3 | |

## ❶ *Power Supply Unit Section (optional accessory)*

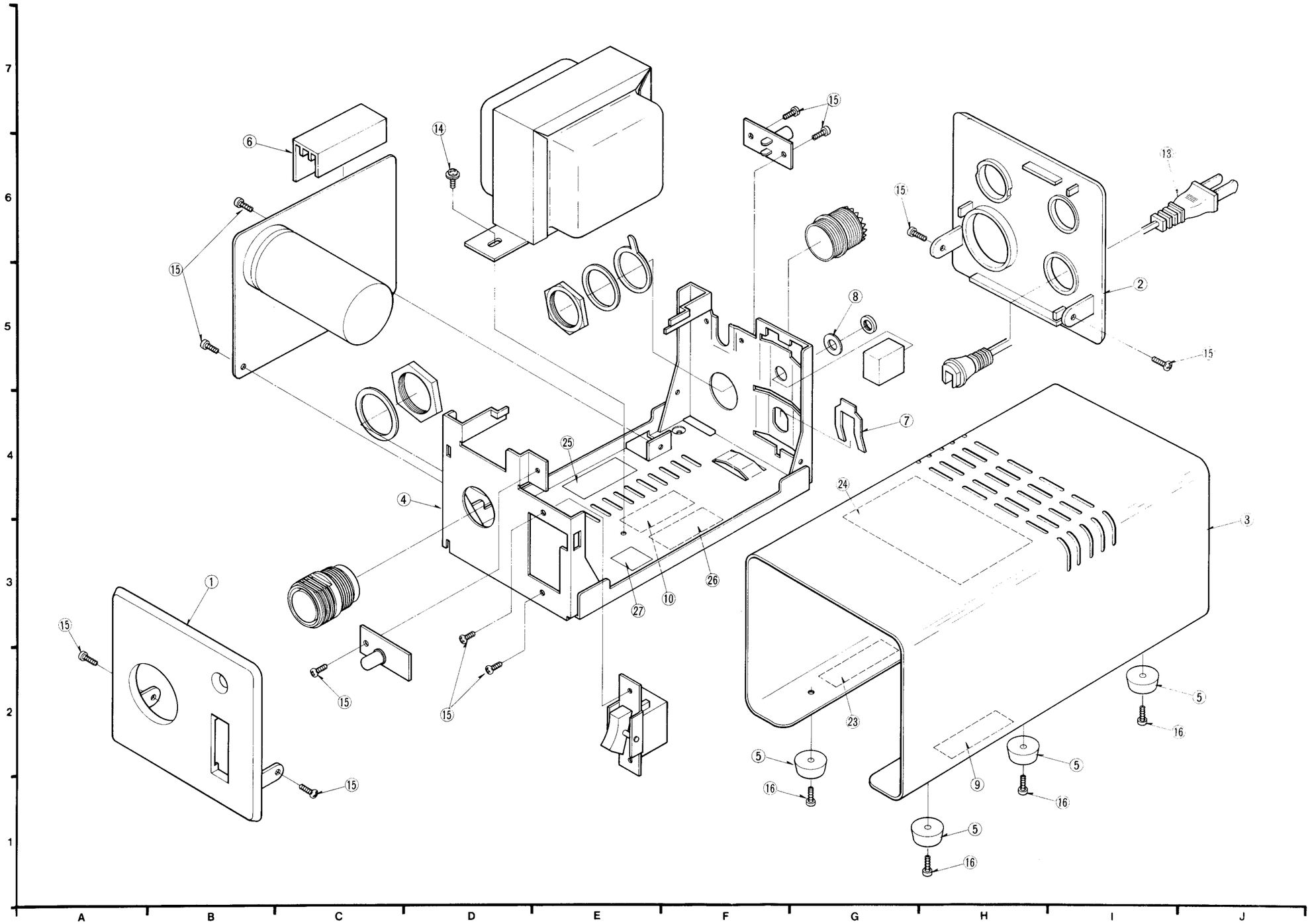

# ❷ Packing Parts Section

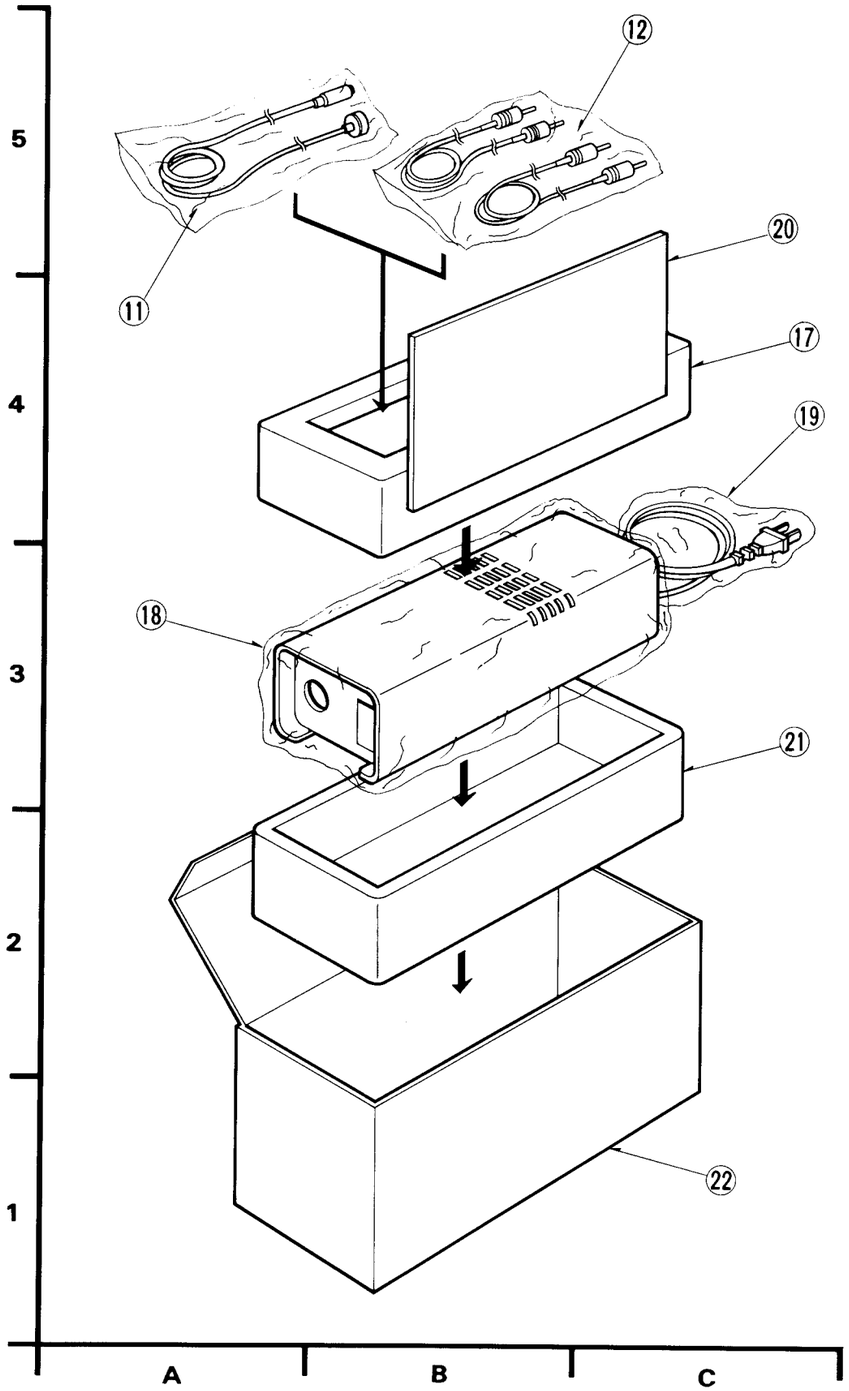


## Mechanical Replacement Parts List

Note: *Be sure to make your orders of replacement parts according to this list.
○ . . . . Available replacement part
X . . . . Not available as replacement
□ . . . . Only available on special order

| Item No. | Drawing No. | Description | Pcs/ Set | Availa-bility | Part No. | Remark |
|---|---|---|---|---|---|---|
| | | PSU | | | | |
| 1 | | PSU FRONT COVER | 1 | o | VKGW0004 | |
| 2 | | BACK COVER | 1 | o | VKGW0091 | |
| 3 | | TOP COVER | 1 | o | VKGW0177 | |
| 4 | | MAIN CHASSIS | 1 | o | VMKW0001 | |
| 5 | | RUBBER LUG | 4 | o | VKAW0001 | |
| 6 | | FUSE COVER | 1 | o | VJFW0001 | |
| 7 | | AC CORD PLATE | 1 | o | VMAW0018 | |
| 8 | | WASHER | 1 | o | VMKW0006 | |
| | | LABEL | | | | |
| 9 | | PSU CAUTION LABEL | 1 | o | VQLW0196 | |
| 10 | | PSU LABEL | 1 | o | VQLW0120 | |
| | | CABLE | | | | |
| 11 | | VIDEO CABLE ASS'Y | 1 | o | VFAK0006 | |
| 12 | | AUDIO REMO.CON. CABLE ASS'Y | 1 | o | VFAK0005 | |
| 13 | | AC CORD | 1 | o | VJAW0004 | |
| | | SCREW | | | | |
| 14 | | PAN HEAD SCREW WITH SPRING | 1 | o | XYN4+F6FU | |
| | | PLATE 3φ x 8 mm | | | | |
| 15 | | BIND TAPPING SCREW | 11 | o | XTB3+6FFU | |
| | | 3φ x 6 mm | | | | |
| 16 | | BIND SCREW 3φ x 8 mm | 4 | o | XSB3+8FZ | |
| | | PACKING | | | | |
| 17 | | CUSHION TOP | 1 | o | VPGW0006 | |
| 18 | | POLY BAG FOR PSU | 1 | o | XZB17X27A02 | |
| 19 | | POLY BAG FOR PSU CORD | 2 | o | XZB10X22A05 | |
| 20 | | OPERATING INSTRUCTIONS | 1 | o | VQTW0043 | |
| 21 | | CUSHION BOTTOM | 1 | o | VPGW0007 | |
| 22 | | PSU PACKING CASE | 1 | o | VPKW0142 | |
| | | LABEL | | | | |
| 23 | | ATTENTION LABEL | 1 | o | VQLW0001 | |
| 24 | | SERVICEMAN W LABEL | 1 | o | VQLW0005 | |
| 25 | | FUSE LABEL (CAUTION) | 1 | o | VQLW0004 | |
| 26 | | FUSE LABEL (ATTENTION) | 1 | o | VQLW0003 | |
| 27 | | PSU CHASSIS LABEL | 1 | o | VQLW0074 | |

## Electrical Replacement Parts List

Note:
1. Be sure to make your orders of replacement parts according to this list.
2. IMPORTANT SAFETY NOTICE
   Components identified by shade have special characteristics important for safety. When replacing any of these components, use only the original ones.
3. Unless otherwise specified:
   All resistors are in OHMS (Ω), 1/6 w, ±5% carbon, K=1,000Ω, M=1,000KΩ.
   All capacitors are in MICROFARADS (μF), ±10% P=μμF.
   All coils are in MICROHENRIES (μH), m=10,μ.
4. C.B.A: Circuit Board Assembly.
5. C.B: Circuit Board.

| Ref. No. | | Part No. | Part Name & Description | Pcs / Set | Remarks |
|---|---|---|---|---|---|
| | | | Power Supply C.B.A. | | |
| | | | Capacitor | | |
| C105 | | ECET25R103SW | 25V 4700 | 1 | |
| | | | Diodes | | |
| D101 | | M1-152 | | 1 | |
| D102 | | M1-152R | | 1 | |
| D103 | | LN21RP-TV | | 1 | |
| | | or LN21RPH-TV | | | |
| | | | Resistor | | |
| R101 | | ERD12TJ561 | 1/2W 560 | 1 | |
| F101 | | XBA1F08NU14A | Fuse 12V 0.8A | 1 | |
| | | VSKW0022 | Power SW | 1 | |
| | | VJJK0037 | Remo. Con. Socket | 1 | |
| | | VEKW0157 | 10 Pin Connector | 1 | |
| | | ETP57RUZ3B | Power Transformer | 1 | |
| | | TJC6319 | Fuse Holder | 2 | |